IN THE UNITED STATES DISTRICT COURT

FOR THE DISTRICT OF DELAWARE

WAVERLY LICENSING LLC, Plaintiff, v. AT&T, INC., Defendant.	)	Civ. No. 22-420-CFC

WAVERLY LICENSING LLC, Plaintiff, v. GRANITE RIVER LABS INC., Defendant.	)	Civ. No. 22-422-CFC

MEMORANDUM ORDER

Whereas the amended corporate disclosure statements filed by Plaintiff in the above-captioned case identify Son Nguyen as Plaintiff's owner; and

Whereas the Court has concerns about the accuracy of those statements and whether Plaintiff has complied with the Court's standing order regarding third-party litigation funding;

NOW THEREFORE, at Wilmington on this Twenty-first day of September in 2022, it is HEREBY ORDERED that:

1. The Court will hold on December 6, 2022 at 1:00 p.m. an evidentiary hearing to determine whether the amended corporate disclosure statements are accurate and whether Plaintiff has complied with the Court's standing order regarding third-party litigation funding;
2. The following individuals shall attend the hearing in person: Jimmy Chong and Son Nguyen.

CHIEF JUDGE

IN THE UNITED STATES DISTRICT COURT

FOR THE DISTRICT OF DELAWARE

STANDING ORDER REGARDING DISCLOSURE STATEMENTS
REQUIRED BY FEDERAL RULE OF CIVIL PROCEDURE 7.1

At Wilmington on this Eighteenth day of April in 2022, it is HEREBY ORDERED in all cases assigned to Judge Connolly where a party is a nongovernmental joint venture, limited liability corporation, partnership, or limited liability partnership, that the party must include in its disclosure statement filed pursuant to Federal Rule of Civil Procedure 7.1 the name of every owner, member, and partner of the party, proceeding up the chain of ownership until the name of every individual and corporation with a direct or indirect interest in the party has been identified.

John F. Connolly
Chief Judge

IN THE UNITED STATES DISTRICT COURT

FOR THE DISTRICT OF DELAWARE

STANDING ORDER REGARDING
THIRD-PARTY LITIGATION FUNDING ARRANGEMENTS

At Wilmington on this Eighteenth day of April in 2022, it is HEREBY ORDERED in all cases assigned to Chief Judge Connolly where a party has made arrangements to receive from a person or entity that is not a party (a "Third-Party Funder") funding for some or all of the party's attorney fees and/or expenses to litigate this action on a non-recourse basis in exchange for (1) a financial interest that is contingent upon the results of the litigation or (2) a non-monetary result that is not in the nature of a personal loan, bank loan, or insurance:

1. Within the later of 45 days of this Order or 30 days of the filing of an initial pleading or transfer of the matter to this District, including the removal of a state action, the party receiving such funding shall file a statement (separate from any pleading) containing the following information:

a. The identity, address, and, if a legal entity, place of formation of the Third-Party Funder(s);

b. Whether any Third-Party Funder's approval is necessary for litigation or settlement decisions in the action, and if the answer is in the

affirmative, the nature of the terms and conditions relating to that approval; and

c. A brief description of the nature of the financial interest of the Third-Party Funder(s).

2. Parties may seek additional discovery of the terms of a party's arrangement with any Third-Party Funder upon a showing that the Third-Party Funder has authority to make material litigation decisions or settlement decisions, the interests of any funded parties or the class (if applicable) are not being promoted or protected by the arrangement, conflicts of interest exist as a result of the arrangement, or other such good cause exists.

3. Nothing herein precludes the Court from ordering such other relief as may be appropriate.

Chief Judge

CERTIFICATE OF SERVICE

I hereby certify that I electronically filed the foregoing with the Clerk of the Court for the United States Court of Appeals for the Federal Circuit by using the appellate CM/ECF system on November 30, 2022.

A copy of the foregoing was served upon the following counsel of record by electronic mail and upon the district court by overnight delivery:

Via Email to counsel for Defendants:

Karen Jacobs, Morris, Nichols, Arsht & Tunnell LLP, 1201 North Market Street, PO Box 1347, Wilmington, DE 19899, kjacobs@morrisnichols.com;

Steven J. Balick and Andrew C. Mayo, Ashby & Geddes, 500 Delaware Avenue, 8th Floor, PO Box 1150, Wilmington, DE 19899, sbalick@ashbygeddes.com, amayo@ashbygeddes.com

Adam R. Hess and Alex E. Wolcott, Squire Patton Boggs (US) LLP, 2550 M. Street, NW, Washington, DC 20037, adam.hess@squirepb.com, alex.wolcott@squirepb.com

Via Overnight Delivery to the Court:

The Honorable Colm F. Connolly
J. Caleb Boggs Federal Building
844 N. King Street
Unit 31
Room 4124
Wilmington, DE 19801-3555

November 30, 2022 */s/ David R. Bennett*

DAVID R. BENNETT
Direction IP Law
P.O. Box 14184
Chicago, IL 60614
D: (312) 291-1667
dbennett@directionip.com

CERTIFICATE OF COMPLIANCE

The foregoing Petition filing complies with the relevant type-volume limitation of the of Fed. R. App. P. 21(d)(1) because this petition has been prepared using a 14-point proportionally-spaced typeface and includes 5,441 words.

November 30, 2022

/s/ David R. Bennett

DAVID R. BENNETT
Direction IP Law
P.O. Box 14184
Chicago, IL 60614
D: (312) 291-1667
dbennett@directionip.com

2022-

United States Court of Appeals for the Federal Circuit

In Re

WAVERLY LICENSING LLC,

Petitioner.

On Petition for Writ of Mandamus to the United States District Court for the District of Delaware, Case Nos. 1:22-cv-420-CFC, 1:22-cv-422-CFC, Honorable Colm F. Connolly, Judge

APPENDIX IN SUPPORT OF TO PETITION FOR A WRIT OF MANDAMUS

DAVID R. BENNETT
DIRECTION IP LAW
P.O. Box 14184
Chicago, IL 60614
D: (312) 291-1667
dbennett@directionip.com

Counsel for Petitioner
Waverly Licensing LLC

November 30, 2022

INDEX

The following index identifies the entire page range for all documents cited in the briefs. The Appendix only includes those pages cited in the Writ and any surrounding pages necessary to put the cited pages in context.

Memorandum Order ("Hearing Order") entered on September 21, 2022 (Doc. No. 16) Appx001-002

Standing Order Regarding Disclosure Statements required by Federal Rule of Civil Procedure dated April 18, 2022 (Chief Judge Colm F. Connolly) Appx003

Standing Order Regarding Third-Party Litigation Funding Arrangements dated April 18, 2022 (Chief Judge Colm F. Connolly) Appx004-005

Docket Entries for Waverly Licensing LLC v. AT&T Mobility LLC, C.A. No. 22-cv-420-CFC Appx006-009

Docket Entries for Waverly Licensing LLC v. Granite River Labs Inc., C.A. No. 22-cv-422-CFC Appx010-013

Original Complaint for Patent Infringement against AT&T Mobility LLC (AT&T Inc.) and Exhibits 1 and 2 (C.A. No. 22-cv-420-CFC at Doc. No. 1) Appx014-235

Original Complaint for Patent Infringement against Granite River Labs Inc. and Exhibits 1 and 2 (C.A. No. 22-cv-422-CFC at Doc. No. 1) Appx236-288

Plaintiff Waverly Licensing LLC's Amended Rule 7.1 Disclosure Statement (C.A. No. 22-cv-420-CFC at Doc. No. 15) Appx289

Joint Stipulation to Dismiss dated September 21, 2022 (C.A. No. 22-422-CFC at Doc. No. 15)…… Appx290-291

Letter from Waverly Licensing LLC to the Court dated October 6, 2022 (C.A. No. 22-cv-420-CFC at Doc. No. 22) Appx292-293

Declaration of Son Nguyen (C.A. No. 22-cv-420-CFC at Doc. No. 22-1)..... Appx294-295

Unopposed Motion to Stay all Deadlines and Notice of Resolution dated November 17, 2022 (C.A. 22-cv-420-CFC at Doc. No. 23)..... Appx296-298

Plaintiff's Motion to Stay dated November 18, 2022 (C.A. 22-cv-420-CFC at Doc. No. 24…. Appx299-304

Plaintiff's Revised Motion to Stay dated November 21, 2022 (C.A. 22-cv-420-CFC) at Doc. No. 25)..... Appx305-311

Disclosure Statement Pursuant to Rule 7.1 dated November 21, 2022 (C.A. 22-420-CFC at Doc. No. 27)….. ..... Appx312-314

Joint Stipulation to Dismiss dated November 28, 2022 (C.A. 22-420-CFC at Doc. No. 28)….. ..... Appx315-316

Patent Assignment (Recorded at USPTO - Reel: 059682, Frame: 0043)..... Appx317-319

Transcript of Evidentiary Hearing dated November 4, 2022, in *Lamplight Licensing LLC v. Abb, Inc.*, C.A. No. 22-418-CFC, *Lamplight Licensing LLC v. Ingram Micro, Inc.*, C.A. No. 22-1017-CFC, *Nimitz Technologies LLC v. CNET Media, Inc.*, C.A. No. 21-1247-CFC; *Nimitz Technologies LLC v. Buzzfeed, Inc.*, C.A. No. 21-1362-CFC, *Nimitz Technologies LLC v. Imagine Learning LLC*, C.A. No. 21-1855-CFC, *Mellaconic IP, LLC v. Timeclock Plus, LLC*, C.A. No. 22-244-CFC, and

Mellaconic IP, LLC v. Deputy, Inc., C.A. No. 22-541-CFC..... Appx320-360

Transcript of Evidentiary Hearing dated November 10, 2022, in *Backertop Licensing LLC v. August Home, Inc..,* C.A. No. 1:22-cv-00573-CFC, *Backertop Licensing LLC v. Canary Connect, Inc.*, C.A. No. 1:22-cv-0572-CFC Appx361-421

Plaintiff Waverly Licensing LLC's Amended Rule 7.1 Disclosure Statement (C.A. No. 22-cv-422-CFC at Doc. No. 14) Appx422

IN THE UNITED STATES DISTRICT COURT

FOR THE DISTRICT OF DELAWARE

WAVERLY LICENSING LLC, Plaintiff, v. AT&T, INC., Defendant.	)	Civ. No. 22-420-CFC

WAVERLY LICENSING LLC, Plaintiff, v. GRANITE RIVER LABS INC., Defendant.	)	Civ. No. 22-422-CFC

MEMORANDUM ORDER

Whereas the amended corporate disclosure statements filed by Plaintiff in the above-captioned case identify Son Nguyen as Plaintiff's owner; and

Whereas the Court has concerns about the accuracy of those statements and whether Plaintiff has complied with the Court's standing order regarding third-party litigation funding;

NOW THEREFORE, at Wilmington on this Twenty-first day of September in 2022, it is HEREBY ORDERED that:

1. The Court will hold on December 6, 2022 at 1:00 p.m. an evidentiary hearing to determine whether the amended corporate disclosure statements are accurate and whether Plaintiff has complied with the Court's standing order regarding third-party litigation funding;
2. The following individuals shall attend the hearing in person: Jimmy Chong and Son Nguyen.

CHIEF JUDGE

IN THE UNITED STATES DISTRICT COURT

FOR THE DISTRICT OF DELAWARE

STANDING ORDER REGARDING DISCLOSURE STATEMENTS
REQUIRED BY FEDERAL RULE OF CIVIL PROCEDURE 7.1

At Wilmington on this Eighteenth day of April in 2022, it is HEREBY ORDERED in all cases assigned to Judge Connolly where a party is a nongovernmental joint venture, limited liability corporation, partnership, or limited liability partnership, that the party must include in its disclosure statement filed pursuant to Federal Rule of Civil Procedure 7.1 the name of every owner, member, and partner of the party, proceeding up the chain of ownership until the name of every individual and corporation with a direct or indirect interest in the party has been identified.

Chief Judge

IN THE UNITED STATES DISTRICT COURT

FOR THE DISTRICT OF DELAWARE

STANDING ORDER REGARDING
THIRD-PARTY LITIGATION FUNDING ARRANGEMENTS

At Wilmington on this Eighteenth day of April in 2022, it is HEREBY ORDERED in all cases assigned to Chief Judge Connolly where a party has made arrangements to receive from a person or entity that is not a party (a "Third-Party Funder") funding for some or all of the party's attorney fees and/or expenses to litigate this action on a non-recourse basis in exchange for (1) a financial interest that is contingent upon the results of the litigation or (2) a non-monetary result that is not in the nature of a personal loan, bank loan, or insurance:

1. Within the later of 45 days of this Order or 30 days of the filing of an initial pleading or transfer of the matter to this District, including the removal of a state action, the party receiving such funding shall file a statement (separate from any pleading) containing the following information:

a. The identity, address, and, if a legal entity, place of formation of the Third-Party Funder(s);

b. Whether any Third-Party Funder's approval is necessary for litigation or settlement decisions in the action, and if the answer is in the

affirmative, the nature of the terms and conditions relating to that approval; and

c. A brief description of the nature of the financial interest of the Third-Party Funder(s).

2. Parties may seek additional discovery of the terms of a party's arrangement with any Third-Party Funder upon a showing that the Third-Party Funder has authority to make material litigation decisions or settlement decisions, the interests of any funded parties or the class (if applicable) are not being promoted or protected by the arrangement, conflicts of interest exist as a result of the arrangement, or other such good cause exists.

3. Nothing herein precludes the Court from ordering such other relief as may be appropriate.

Chief Judge

Create an Alert for This Case on RECAP

PATENT

U.S. District Court
District of Delaware (Wilmington)
CIVIL DOCKET FOR CASE #: 1:22-cv-00420-CFC

Waverly Licensing LLC v. AT&T Mobility LLC
Assigned to: Judge Colm F. Connolly
Related Cases: 1:22-cv-00421-CFC
1:22-cv-00423-CFC
1:22-cv-00422-CFC
1:22-cv-00889-CFC
1:22-cv-00424-CFC
Cause: 35:1 Patent Infringement

Date Filed: 03/31/2022
Jury Demand: Plaintiff
Nature of Suit: 830 Patent
Jurisdiction: Federal Question

Plaintiff

Waverly Licensing LLC

represented by **Jimmy C. Chong**
Chong Law Firm, PA
2961 Centerville Rd., Ste 350
Wilmington, DE 19808
302-999-9480
Fax: 302-800-1999
Email: chong@chonglawfirm.com
LEAD ATTORNEY
ATTORNEY TO BE NOTICED

V.

Defendant

AT&T, Inc.
TERMINATED: 09/22/2022

Defendant

AT&T Mobility LLC

represented by **Karen Jacobs**
Morris, Nichols, Arsht & Tunnell LLP
1201 North Market Street
P.O. Box 1347
Wilmington, DE 19899
(302)658-9200
Email: kjacobs@mnat.com
LEAD ATTORNEY

Date Filed	#	Docket Text
03/31/2022	1	COMPLAINT FOR PATENT INFRINGEMENT - filed with Jury Demand against AT&T, Inc. - Magistrate Consent Notice to Pltf. (Filing fee $ 402, receipt number

		ADEDC-3839173.) - filed by Waverly Licensing LLC. (Attachments: # 1 Exhibit 1, # 2 Exhibit 2, # 3 Civil Cover Sheet, # 4 Related Cases)(mal) (Entered: 03/31/2022)
03/31/2022	2	Notice, Consent and Referral forms re: U.S. Magistrate Judge jurisdiction. (mal) (Entered: 03/31/2022)
03/31/2022	3	Report to the Commissioner of Patents and Trademarks for Patent/Trademark Number(s) 10,938,246. (mal) (Entered: 03/31/2022)
03/31/2022	4	Disclosure Statement pursuant to Rule 7.1: No Parents or Affiliates Listed filed by Waverly Licensing LLC. (mal) (Entered: 03/31/2022)
03/31/2022	5	Summons Issued as to AT&T, Inc. on 3/31/2022. (mal) (Entered: 03/31/2022)
04/05/2022	6	SUMMONS Returned Executed by Waverly Licensing LLC. AT&T, Inc. served on 4/4/2022, answer due 4/25/2022. (Chong, Jimmy) (Entered: 04/05/2022)
04/06/2022		Case Assigned to Judge Colm F. Connolly. Please include the initials of the Judge (CFC) after the case number on all documents filed. Associated Cases: 1:22-cv-00420-CFC, 1:22-cv-00421-CFC, 1:22-cv-00422-CFC, 1:22-cv-00423-CFC, 1:22-cv-00424-CFC (rjb) (Entered: 04/06/2022)
04/14/2022	7	STIPULATION TO EXTEND TIME to Answer the Complaint to 05/25/2022 - filed by Waverly Licensing LLC. (Chong, Jimmy) (Entered: 04/14/2022)
04/14/2022		SO ORDERED, re 7 STIPULATION TO EXTEND TIME to Answer the Complaint to 05/25/2022, filed by Waverly Licensing LLC. Reset Answer Deadlines: AT&T, Inc. answer due 5/25/2022. Ordered by Judge Colm F. Connolly on 4/14/2022. (kmd) (Entered: 04/14/2022)
05/20/2022	8	STIPULATION TO EXTEND TIME to Answer the Complaint to 06/24/2022 - filed by Waverly Licensing LLC. (Chong, Jimmy) (Entered: 05/20/2022)
05/20/2022		SO ORDERED, re 8 STIPULATION TO EXTEND TIME to Answer the Complaint to 06/24/2022, filed by Waverly Licensing LLC. Reset Answer Deadlines: AT&T, Inc. answer due 6/24/2022. Ordered by Judge Colm F. Connolly on 5/20/2022. (kmd) (Entered: 05/20/2022)
06/07/2022	9	ORDER: IT IS ORDERED that, on or before July 8, 2022, counsel for plaintiff shall inform the court as to whether the need for coordinated discovery and/or Markman proceedings is anticipated as these cases and, if so, when a joint scheduling conference might most efficiently be conducted. ORDER, Setting Deadlines: (Notice of Compliance deadline set for 7/8/2022.) Signed by Judge Colm F. Connolly on 6/7/2022. Associated Cases: 1:22-cv-00420-CFC, 1:22-cv-00422-CFC, 1:22-cv-00423-CFC(nmf) (Entered: 06/07/2022)
06/07/2022	10	STIPULATION TO EXTEND TIME to Answer the Complaint to 07/25/2022 - filed by Waverly Licensing LLC. (Chong, Jimmy) (Entered: 06/07/2022)
06/07/2022		SO ORDERED, re 10 STIPULATION TO EXTEND TIME to Answer the Complaint to 07/25/2022, filed by Waverly Licensing LLC, Set/Reset Answer Deadlines: AT&T, Inc. answer due 7/25/2022. Ordered by Judge Colm F. Connolly on 6/7/2022. (kmd) (Entered: 06/07/2022)
07/08/2022	11	NOTICE of Coordination by Waverly Licensing LLC re (9 in 1:22-cv-00420-CFC, 9 in 1:22-cv-00420-CFC, 10 in 1:22-cv-00422-CFC, 10 in 1:22-cv-00422-CFC) Order,, Set Deadlines, (Chong, Jimmy) (Entered: 07/08/2022)
07/18/2022	12	STIPULATION TO EXTEND TIME to Answer the Complaint to 08/24/2022 - filed by Waverly Licensing LLC. (Chong, Jimmy) (Entered: 07/18/2022)

07/18/2022		SO ORDERED, re 12 STIPULATION TO EXTEND TIME to Answer the Complaint to 08/24/2022, filed by Waverly Licensing LLC, Set/Reset Answer Deadlines: AT&T, Inc. answer due 8/24/2022. Ordered by Judge Colm F. Connolly on 7/18/2022. (kmd) (Entered: 07/18/2022)
07/20/2022	13	Order Setting Telephonic Scheduling Conference: A Scheduling Conference is set for 9/28/2022 at 02:00 PM Telephonically before Judge Colm F. Connolly. Unless otherwise agreed to by the parties, trial in this case shall begin May 19, 2025. If the parties have no disputes about the scheduling order, the Court will not require the parties to appear at a conference. Signed by Judge Colm F. Connolly on 7/20/2022. (nmf) (Entered: 07/20/2022)
08/15/2022	14	STIPULATION TO EXTEND TIME to Answer the Complaint to 09/23/2022 - filed by Waverly Licensing LLC. (Chong, Jimmy) (Entered: 08/15/2022)
08/17/2022		SO ORDERED, re 14 STIPULATION TO EXTEND TIME to Answer the Complaint to 09/23/2022 filed by Waverly Licensing LLC, Set/Reset Answer Deadlines: AT&T, Inc. answer due 9/23/2022. Signed by Judge Colm F. Connolly on 8/17/2022. (nmf) (Entered: 08/17/2022)
09/02/2022	15 R	AMENDED DOCUMENT by Waverly Licensing LLC. Amendment to 4 Disclosure Statement . (Chong, Jimmy) (Entered: 09/02/2022)
09/21/2022	16 R	MEMORANDUM ORDER, Setting Hearings: An Evidentiary Hearing is set for 12/6/2022 at 01:00 PM in Courtroom 4B before Judge Colm F. Connolly to determine whether the amended corporate disclosure statements are accurate and whether Plaintiff has complied with the Court's standing order regarding third-party litigation funding. The following individuals shall attend the hearing in person: Jimmy Chong and Son Nguyen. Signed by Judge Colm F. Connolly on 9/21/2022. (nmf) (Entered: 09/21/2022)
09/21/2022		ORAL ORDER Regarding Scheduling Conference: The 9/28/2022 Scheduling Conference will be held in-person. (A Scheduling Conference is set for 9/28/2022 at 02:00 PM in Courtroom 4B before Judge Colm F. Connolly) Ordered by Judge Colm F. Connolly on 9/21/2022. (nmf) (Entered: 09/21/2022)
09/22/2022	17	AMENDED COMPLAINT *for Patent Infringement* against AT&T Mobility LLC- filed by Waverly Licensing LLC. (Attachments: # 1 Exhibit, # 2 Exhibit, # 3 Exhibit) (Chong, Jimmy) (Entered: 09/22/2022)
09/23/2022	18	WAIVER OF SERVICE returned executed by Waverly Licensing LLC: For AT&T Mobility LLC waiver sent on 9/22/2022, answer due 11/21/2022. (Chong, Jimmy) (Entered: 09/23/2022)
09/26/2022	19	PROPOSED ORDER Proposed Scheduling Order by Waverly Licensing LLC. (Chong, Jimmy) (Entered: 09/26/2022)
09/27/2022		Remark: The 9/28/2022 Scheduling Conference is canceled per the filing of the Proposed Scheduling Order with no areas of dispute. (nmf) (Entered: 09/27/2022)
09/28/2022	20	SCHEDULING ORDER: Joinder of Parties due by 4/7/2023. Amended Pleadings due by 4/7/2023. Fact Discovery completed by 3/29/2024. Expert Discovery due by 7/26/2024. Dispositive Motions due by 9/17/2024. Answering Brief due 10/18/2024. Reply Brief due 11/8/2024. Joint Claim Construction Brief due by 8/25/2023. A Markman Hearing is set for 10/17/2023 at 09:00 AM in Courtroom 4B before Judge Colm F. Connolly. Proposed Pretrial Order due by 3/28/2025. A Final Pretrial Conference is set for 5/8/2025 at 03:00 PM in Courtroom 4B before Judge Colm F. Connolly. A Jury Trial is set for 5/19/2025 at 08:30 AM in Courtroom 4B before Judge

		Colm F. Connolly. Signed by Judge Colm F. Connolly on 9/28/2022. (nmf) (Entered: 09/28/2022)
10/06/2022	21	STATEMENT *Regarding Third-Party Litigation Funding Arrangements* by Waverly Licensing LLC. (Chong, Jimmy) (Entered: 10/06/2022)
10/06/2022	22 R	Letter to The Honorable Colm F. Connolly from Jimmy Chong regarding In response to Court's Memorandum Order - re (16 in 1:22-cv-00420-CFC, 16 in 1:22-cv-00420-CFC, 16 in 1:22-cv-00422-CFC, 16 in 1:22-cv-00422-CFC) Memorandum and Order,, Set Hearings,. (Attachments: # 1 Affidavit Declaration of Son Nguyen)(Chong, Jimmy) (Entered: 10/06/2022)
11/17/2022	23 R	MOTION to Stay *All Deadlines and Notice of Settlement to 12/21/22* - filed by Waverly Licensing LLC. (Chong, Jimmy) (Entered: 11/17/2022)
11/18/2022	24	MOTION to Stay - filed by Waverly Licensing LLC. (Attachments: # 1 Text of Proposed Order)(Chong, Jimmy) (Entered: 11/18/2022)
11/21/2022	25	Amended MOTION to Stay - filed by Waverly Licensing LLC. (Attachments: # 1 Text of Proposed Order)(Chong, Jimmy) (Entered: 11/21/2022)
11/21/2022	26 R	ANSWER to Amended Complaint, re: 17 Amended Complaint with Jury Demand by AT&T Mobility LLC.(Jacobs, Karen) (Entered: 11/21/2022)
11/21/2022	27	Disclosure Statement pursuant to Rule 7.1: identifying Corporate Parent AT&T, Inc., Other Affiliate SBC Long Distance, LLC, Other Affiliate BellSouth Mobile Data, Inc., Other Affiliate New Cingular Wireless Services, Inc., Other Affiliate AT&T Investment & Tower Holdings, LLC for AT&T Mobility LLC filed by AT&T Mobility LLC. (Jacobs, Karen) (Entered: 11/21/2022)
11/28/2022		CORRECTING ENTRY: The Notice of Voluntary Dismissal, previously filed at D.I. 28, has been deleted per request of filer. (nmf) (Entered: 11/28/2022)
11/28/2022	28	Joint STIPULATION to Dismiss by Waverly Licensing LLC. (Chong, Jimmy) (Entered: 11/28/2022)

PACER Service Center

Transaction Receipt

11/30/2022 00:24:27

PACER Login:	pchaudhari	**Client Code:**	Waverly
Description:	Docket Report	**Search Criteria:**	1:22-cv-00420-CFC Start date: 1/1/1973 End date: 11/30/2022
Billable Pages:	4	**Cost:**	0.40

Create an Alert for This Case on RECAP

PATENT

U.S. District Court
District of Delaware (Wilmington)
CIVIL DOCKET FOR CASE #: 1:22-cv-00422-CFC

Waverly Licensing LLC v. Granite River Labs Inc.
Assigned to: Judge Colm F. Connolly
Related Cases: 1:22-cv-00420-CFC
1:22-cv-00421-CFC
1:22-cv-00423-CFC
1:22-cv-00889-CFC
1:22-cv-00424-CFC
Cause: 35:1 Patent Infringement

Date Filed: 03/31/2022
Jury Demand: Plaintiff
Nature of Suit: 830 Patent
Jurisdiction: Federal Question

Plaintiff

Waverly Licensing LLC

represented by **Jimmy C. Chong**
Chong Law Firm, PA
2961 Centerville Rd., Ste 350
Wilmington, DE 19808
302-999-9480
Fax: 302-800-1999
Email: chong@chonglawfirm.com
LEAD ATTORNEY
ATTORNEY TO BE NOTICED

V.

Defendant

Granite River Labs Inc.

represented by **Steven J. Balick**
Ashby & Geddes
500 Delaware Avenue, 8th Floor
P.O. Box 1150
Wilmington, DE 19801
(302) 654-1888
Fax: (302) 654-2067
Email: sbalick@ashbygeddes.com
LEAD ATTORNEY
ATTORNEY TO BE NOTICED

Adam R Hess
Email: adam.hess@squirepb.com
PRO HAC VICE
ATTORNEY TO BE NOTICED

Alex E. Wolcott
Email: alex.wolcott@squirepb.com

PRO HAC VICE
ATTORNEY TO BE NOTICED

Counter Claimant

Granite River Labs Inc. represented by **Steven J. Balick**
(See above for address)
LEAD ATTORNEY
ATTORNEY TO BE NOTICED

Adam R Hess
(See above for address)
ATTORNEY TO BE NOTICED

Alex E. Wolcott
(See above for address)
ATTORNEY TO BE NOTICED

V.

Counter Defendant

Waverly Licensing LLC represented by **Jimmy C. Chong**
(See above for address)
LEAD ATTORNEY
ATTORNEY TO BE NOTICED

Date Filed	#	Docket Text
03/31/2022	1 R	COMPLAINT for PATENT INFRINGEMENT filed with Jury Demand against Granite River Labs Inc. - Magistrate Consent Notice to Pltf. (Filing fee $ 402, receipt number ADEDC-3839217.) - filed by Waverly Licensing LLC. (Attachments: # 1 Exhibit 1, # 2 Exhibit 2, # 3 Related Cases, # 4 Civil Cover Sheet)(twk) (Entered: 03/31/2022)
03/31/2022	2	Notice, Consent and Referral forms re: U.S. Magistrate Judge jurisdiction. (twk) (Entered: 03/31/2022)
03/31/2022	3	Report to the Commissioner of Patents and Trademarks for Patent/Trademark Number(s) 10,938,246. (twk) (Entered: 03/31/2022)
03/31/2022	4	Disclosure Statement pursuant to Rule 7.1: No Parents or Affiliates Listed filed by Waverly Licensing LLC. (twk) (Entered: 03/31/2022)
03/31/2022	5	Summons Issued as to Granite River Labs Inc. on 3/31/2022. (twk) (Entered: 03/31/2022)
04/05/2022	6	SUMMONS Returned Executed by Waverly Licensing LLC. Granite River Labs Inc. served on 4/4/2022, answer due 4/25/2022. (Chong, Jimmy) (Entered: 04/05/2022)
04/06/2022		Case Assigned to Judge Colm F. Connolly. Please include the initials of the Judge (CFC) after the case number on all documents filed. Associated Cases: 1:22-cv-00420-CFC, 1:22-cv-00421-CFC, 1:22-cv-00422-CFC, 1:22-cv-00423-CFC, 1:22-cv-00424-CFC (rjb) (Entered: 04/06/2022)
04/18/2022	7	STIPULATION TO EXTEND TIME to Respond to the Complaint to May 25, 2022 - filed by Granite River Labs Inc.. (Balick, Steven) (Entered: 04/18/2022)
04/18/2022		SO ORDERED, re 7 STIPULATION TO EXTEND TIME to Respond to the Complaint

		to May 25, 2022, filed by Granite River Labs Inc. Reset Answer Deadlines: Granite River Labs Inc. answer due 5/25/2022. Ordered by Judge Colm F. Connolly on 4/18/2022. (kmd) (Entered: 04/18/2022)
04/27/2022	8	MOTION for Pro Hac Vice Appearance of Attorney Adam R. Hess and Alex E. Wolcott - filed by Granite River Labs Inc.. (Balick, Steven) (Entered: 04/27/2022)
04/27/2022		SO ORDERED, re 8 MOTION for Pro Hac Vice Appearance of Attorney Adam R. Hess and Alex E. Wolcott, filed by Granite River Labs Inc. Ordered by Judge Colm F. Connolly on 4/27/2022. (kmd) (Entered: 04/27/2022)
04/27/2022		Pro Hac Vice Attorney Adam R Hess for Granite River Labs Inc. added for electronic noticing. Pursuant to Local Rule 83.5 (d)., Delaware counsel shall be the registered users of CM/ECF and shall be required to file all papers. (mpb) (Entered: 04/27/2022)
04/28/2022		Pro Hac Vice Attorney Alex E. Wolcott for Granite River Labs Inc. added for electronic noticing. Pursuant to Local Rule 83.5 (d)., Delaware counsel shall be the registered users of CM/ECF and shall be required to file all papers. (apk) (Entered: 04/28/2022)
05/25/2022	9	ANSWER to 1 R Complaint, with Jury Demand , COUNTERCLAIM against Waverly Licensing LLC by Granite River Labs Inc..(Balick, Steven) (Entered: 05/25/2022)
06/07/2022	10	ORDER: IT IS ORDERED that, on or before July 8, 2022, counsel for plaintiff shall inform the court as to whether the need for coordinated discovery and/or Markman proceedings is anticipated as these cases and, if so, when a joint scheduling conference might most efficiently be conducted. ORDER, Setting Deadlines: (Notice of Compliance deadline set for 7/8/2022.) Signed by Judge Colm F. Connolly on 6/7/2022. Associated Cases: 1:22-cv-00420-CFC, 1:22-cv-00422-CFC, 1:22-cv-00423-CFC(nmf) (Entered: 06/07/2022)
06/15/2022	11	ANSWER to 9 Answer to Complaint, Counterclaim by Waverly Licensing LLC. (Chong, Jimmy) (Entered: 06/15/2022)
07/08/2022	12	NOTICE of Coordination by Waverly Licensing LLC re (9 in 1:22-cv-00420-CFC, 9 in 1:22-cv-00420-CFC, 10 in 1:22-cv-00422-CFC, 10 in 1:22-cv-00422-CFC) Order,, Set Deadlines, (Chong, Jimmy) (Entered: 07/08/2022)
07/20/2022	13	Order Setting Telephonic Scheduling Conference: A Scheduling Conference is set for 9/28/2022 at 02:00 PM Telephonically before Judge Colm F. Connolly. Unless otherwise agreed to by the parties, trial in this case shall begin May 19, 2025. If the parties have no disputes about the scheduling order, the Court will not require the parties to appear at a conference. Signed by Judge Colm F. Connolly on 7/20/2022. (nmf) (Entered: 07/20/2022)
09/02/2022	14	AMENDED DOCUMENT by Waverly Licensing LLC. Amendment to 4 Disclosure Statement . (Chong, Jimmy) (Entered: 09/02/2022)
09/21/2022	15	Joint STIPULATION to Dismiss by Waverly Licensing LLC. (Chong, Jimmy) (Entered: 09/21/2022)
09/21/2022	16 R	MEMORANDUM ORDER, Setting Hearings: An Evidentiary Hearing is set for 12/6/2022 at 01:00 PM in Courtroom 4B before Judge Colm F. Connolly to determine whether the amended corporate disclosure statements are accurate and whether Plaintiff has complied with the Court's standing order regarding third-party litigation funding. The following individuals shall attend the hearing in person: Jimmy Chong and Son Nguyen. Signed by Judge Colm F. Connolly on 9/21/2022. (nmf) (Entered: 09/21/2022)
09/21/2022		The 9/28/2022 Scheduling Conference is canceled as to Civil Action No. 22-422-CFC. (nmf) (Entered: 09/21/2022)

10/06/2022	17	STATEMENT *Regarding Third-Party Litigation Funding Arrangements* by Waverly Licensing LLC. (Chong, Jimmy) (Entered: 10/06/2022)
10/06/2022	18	Letter to The Honorable Colm F. Connolly from Jimmy Chong regarding In response to Court's Memorandum Order - re (16 in 1:22-cv-00420-CFC, 16 in 1:22-cv-00420-CFC, 16 in 1:22-cv-00422-CFC, 16 in 1:22-cv-00422-CFC) Memorandum and Order,, Set Hearings,. (Attachments: # 1 Affidavit Declaration of Son Nguyen)(Chong, Jimmy) (Entered: 10/06/2022)
11/18/2022	19	MOTION to Stay - filed by Waverly Licensing LLC. (Attachments: # 1 Text of Proposed Order)(Chong, Jimmy) (Entered: 11/18/2022)
11/21/2022	20	Amended MOTION to Stay - filed by Waverly Licensing LLC. (Attachments: # 1 Text of Proposed Order)(Chong, Jimmy) (Entered: 11/21/2022)

PACER Service Center

Transaction Receipt

11/30/2022 00:25:21

PACER Login:	pchaudhari	**Client Code:**	Waverly
Description:	Docket Report	**Search Criteria:**	1:22-cv-00422-CFC Start date: 1/1/1973 End date: 11/30/2022
Billable Pages:	3	**Cost:**	0.30

IN THE UNITED STATES DISTRICT COURT
FOR THE DISTRICT OF DELAWARE

WAVERLY LICENSING LLC, Plaintiff, v. **AT&T, INC.,** Defendant.	Case No. Patent Case Jury Trial Demanded

COMPLAINT FOR PATENT INFRINGEMENT

Plaintiff Waverly Licensing LLC ("Plaintiff"), through its attorneys, complains of AT&T, Inc. ("Defendant"), and alleges the following:

PARTIES

1. Plaintiff Waverly Licensing LLC is a limited liability company with its principal place of business at 3333 Preston Road STE 300 #1095, Frisco, TX 75034.
2. Upon information and belief, Defendant is a corporation organized under the laws of Delaware, having a principal place of business at 208 South Akard Street, Dallas, Texas 75202. Upon information and belief, Defendant may be served with process c/o The Corporation Trust Company, Corporation Trust Center, 1209 Orange Street, Wilmington, DE 19801.

JURISDICTION

3. This is an action for patent infringement arising under the patent laws of the United States, Title 35 of the United States Code.
4. This Court has exclusive subject matter jurisdiction under 28 U.S.C. §§ 1331 and 1338(a).

5. This Court has personal jurisdiction over Defendant because it has engaged in systematic and continuous business activities in this District. As described below, Defendant has committed acts of patent infringement giving rise to this action within this District.

VENUE

6. Venue is proper in this District under 28 U.S.C. § 1400(b) because Defendant has committed acts of patent infringement in this District and Defendant is incorporated in in this District. In addition, Plaintiff has suffered harm in this district.

PATENT-IN-SUIT

7. On March 2, 2021, the United States Patent and Trademark Office ("USPTO") duly and legally issued U.S. Patent No. 10,938,246 (the "'246 Patent"), entitled "METHOD AND APPARATUS FOR CHARGING A BATTERY – OPERATED DEVICE" after a full and fair examination. The '246 Patent is attached hereto as Exhibit 1 and incorporated herein as if fully rewritten.
8. Plaintiff is presently the owner of the '246 Patent, having received all right, title and interest in and to the '246 Patent from the previous assignee of record. Plaintiff possesses all rights of recovery under the '246 Patent, including the exclusive right to recover for past infringement.
9. To the extent required, Plaintiff has complied with all marking requirements under 35 U.S.C. § 287.

COUNT 1: INFRINGEMENT OF THE '246 PATENT

10. Plaintiff incorporates the above paragraphs herein by reference.
11. **Direct Infringement.** Defendant has directly infringed one or more claims of the '246 Patent in at least this District by making, using, offering to sell, selling and/or importing, without limitation, at least the Defendant products identified in the charts incorporated into this Count

below (among the "Exemplary Defendant Products") that infringe at least the exemplary claims of the '246 Patent also identified in the charts incorporated into this Count below (the "Exemplary '246 Patent Claims") literally or by the doctrine of equivalents. On information and belief, numerous other devices that infringe the claims of the '246 Patent have been made, used, sold, imported, and offered for sale by Defendant and/or its customers.

12. Defendants also have directly infringed, literally or under the doctrine of equivalents, the Exemplary '246 Patent Claims, by having its employees internally test and use these Exemplary Products.

13. Exhibit 2 includes charts comparing the Exemplary '246 Patent Claims to the Exemplary Defendant Products. As set forth in these charts, the Exemplary Defendant Products practice the technology claimed by the '246 Patent. Accordingly, the Exemplary Defendant Products incorporated in these charts satisfy all elements of the Exemplary '246 Patent Claims.

14. Plaintiff therefore incorporates by reference in its allegations herein the claim charts of Exhibit 2.

15. Plaintiff is entitled to recover damages adequate to compensate for Defendants' infringement.

JURY DEMAND

16. Under Rule 38(b) of the Federal Rules of Civil Procedure, Plaintiff respectfully requests a trial by jury on all issues so triable.

PRAYER FOR RELIEF

WHEREFORE, Plaintiff respectfully requests the following relief:

A. A judgment that the '246 Patent is valid and enforceable;

B. A judgment that Defendants have infringed, one or more claims of the '246 Patent;

C. An accounting of all damages not presented at trial;

D. A judgment that awards Plaintiff all appropriate damages under 35 U.S.C. § 284 for Defendants' infringement with respect to the '246 patent;

E. And, if necessary, to adequately compensate Plaintiff for Defendants' infringement, an accounting:

i. that this case be declared exceptional within the meaning of 35 U.S.C. § 285 and that Plaintiff be awarded its reasonable attorneys' fees against Defendants that it incurs in prosecuting this action;

ii. that Plaintiff be awarded costs, and expenses that it incurs in prosecuting this action; and

iii. that Plaintiff be awarded such further relief at law or in equity as the Court deems just and proper.

Dated: March 31, 2022

Respectfully submitted,

CHONG LAW FIRM PA

/s/ Jimmy Chong

Jimmy Chong (#4839)
2961 Centerville Road, Suite 350
Wilmington, DE 19808
Telephone: (302) 999-9480
Facsimile: (302) 800-1999
Email: chong@chonglawfirm.com

Counsel for Plaintiff
Waverly Licensing LLC

US010938246B2

(12) **United States Patent**
Moshfeghi

(10) **Patent No.: US 10,938,246 B2**
(45) **Date of Patent: *Mar. 2, 2021**

(54) **METHOD AND APPARATUS FOR CHARGING A BATTERY-OPERATED DEVICE**

(71) Applicant: **Golba LLC**, Rancho Palos Verdes, CA (US)

(72) Inventor: **Mehran Moshfeghi**, Rancho Palos Verdes, CA (US)

(73) Assignee: **Golba, LLC**, Rancho Palos Verdes, CA (US)

(*) Notice: Subject to any disclaimer, the term of this patent is extended or adjusted under 35 U.S.C. 154(b) by 0 days.

This patent is subject to a terminal disclaimer.

(21) Appl. No.: **16/793,910**

(22) Filed: **Feb. 18, 2020**

(65) **Prior Publication Data**

US 2020/0185971 A1 Jun. 11, 2020

Related U.S. Application Data

(63) Continuation of application No. 16/436,824, filed on Jun. 10, 2019, now abandoned, which is a

(Continued)

(51) **Int. Cl.**

H02J 7/00	(2006.01)
H02J 50/12	(2016.01)
H02J 50/90	(2016.01)
H02J 50/80	(2016.01)
H04B 1/3827	(2015.01)
H02J 50/20	(2016.01)

(Continued)

(52) **U.S. Cl.**

CPC ***H02J 50/12*** (2016.02); ***H02J 7/025*** (2013.01); ***H02J 50/20*** (2016.02); ***H02J 50/80*** (2016.02); ***H02J 50/90*** (2016.02); ***H04B 1/3838*** (2013.01); *H01Q 3/005* (2013.01); *H04B 7/26* (2013.01)

(58) **Field of Classification Search**

CPC H02J 50/12
USPC 320/108
See application file for complete search history.

(56) **References Cited**

U.S. PATENT DOCUMENTS

5,504,415 A * 4/1996 Podrazhansky H02J 7/0016 320/118
5,528,122 A * 6/1996 Sullivan H02J 7/0018 320/118

(Continued)

Primary Examiner — Yalkew Fantu
(74) *Attorney, Agent, or Firm* — Farjami & Farjami LLP

(57) **ABSTRACT**

There is provided a battery-operated device that include a battery, an electronic circuitry configured to be powered by the battery, and a converter configured to receive energy from any of a plurality of authorized chargers, and generate power from the energy for charging the battery using the power. The battery-operated device is configured to receive a charger identification from a charger, and determine whether the charger identification is in a list of charger identifications belonging to the plurality of authorized chargers. The battery-operated device is further configured to, in response to determining that the charger identification is in the list of charger identifications receive the energy from the charger, generate, using the converter, the power from the energy received from the charger, charge the battery using the power received from the converter, and use the battery to power the electronic circuitry.

20 Claims, 24 Drawing Sheets

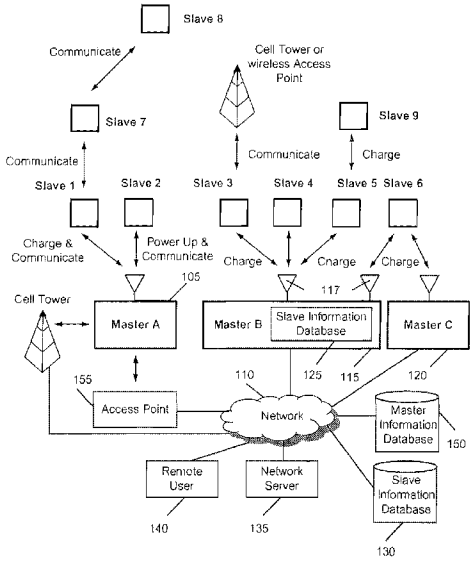

Related U.S. Application Data

continuation of application No. 15/610,379, filed on May 31, 2017, now Pat. No. 10,355,531, which is a continuation of application No. 15/263,629, filed on Sep. 13, 2016, now Pat. No. 9,847,670, which is a continuation of application No. 14/223,841, filed on Mar. 24, 2014, now Pat. No. 9,608,472, which is a continuation of application No. 12/979,254, filed on Dec. 27, 2010, now Pat. No. 8,686,685.

(60) Provisional application No. 61/290,184, filed on Dec. 25, 2009.

(51) **Int. Cl.**

H02J 7/02	(2016.01)
H01Q 3/00	(2006.01)
H04B 7/26	(2006.01)

(56) **References Cited**

U.S. PATENT DOCUMENTS

6,867,567	B2 *	3/2005	Yokota	H02J 7/0047 320/134
2004/0135544	A1 *	7/2004	King	B60L 53/11 320/116
2004/0135546	A1 *	7/2004	Chertok	B60L 58/22 320/118
2011/0127953	A1 *	6/2011	Walley	H02J 7/025 320/108

* cited by examiner

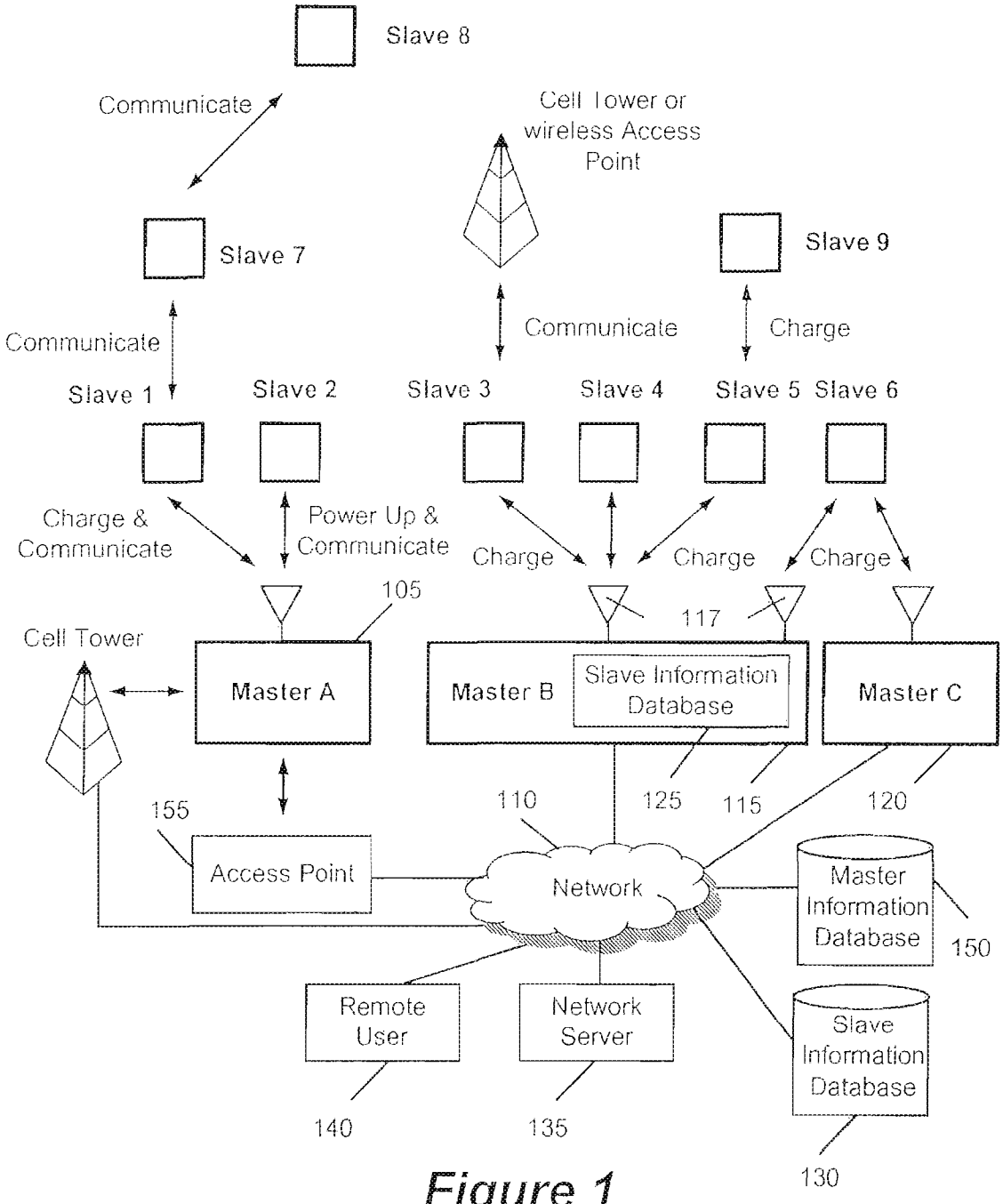
Slave 8
Communicate
Cell Tower or wireless Access Point
Slave 7
Slave 9
Communicate
Communicate
Charge
Slave 1
Slave 2
Slave 3
Slave 4
Slave 5
Slave 6
Charge & Communicate
Power Up & Communicate
Charge
Charge
Charge
105
117
Cell Tower
Master A
Master B
Slave Information Database
Master C
155
110
125
115
120
Access Point
Network
Master Information Database
150
Remote User
Network Server
Slave Information Database
140
135
130

Figure 1

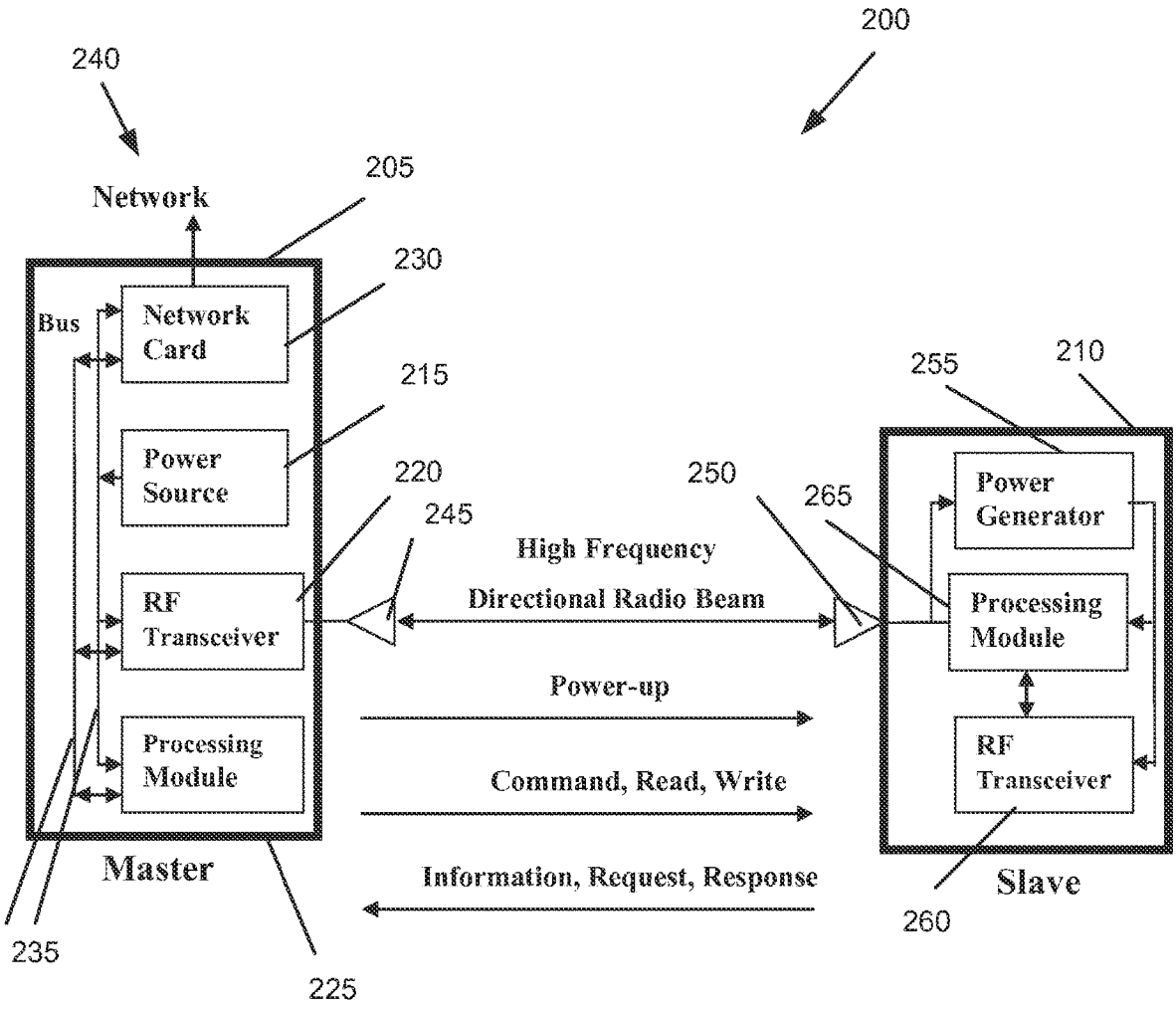
200
240
Network
205
230
Bus
Network Card
215
Power Source
220
245
RF Transceiver
Processing Module
Master
235
225
High Frequency
Directional Radio Beam
Power-up
Command, Read, Write
Information, Request, Response
250
265
255
210
Power Generator
Processing Module
RF Transceiver
Slave
260

Figure 2

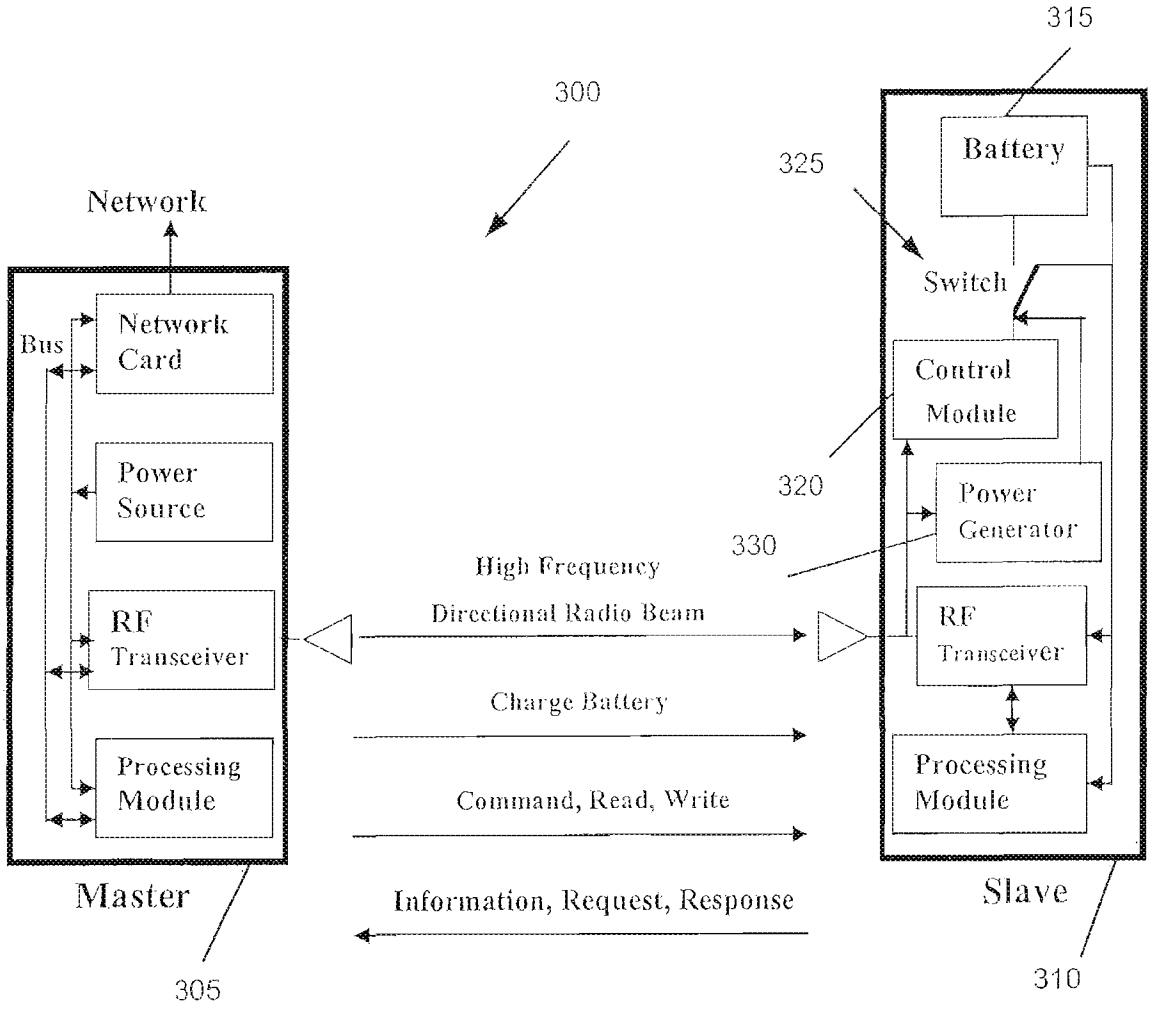
300
315
325
Battery
Switch
Network
Bus
Network Card
Power Source
RF Transceiver
Processing Module
Control Module
320
Power Generator
330
High Frequency
Directional Radio Beam
RF Transceiver
Charge Battery
Command, Read, Write
Information, Request, Response
Processing Module
Master
Slave
305
310

Figure 3

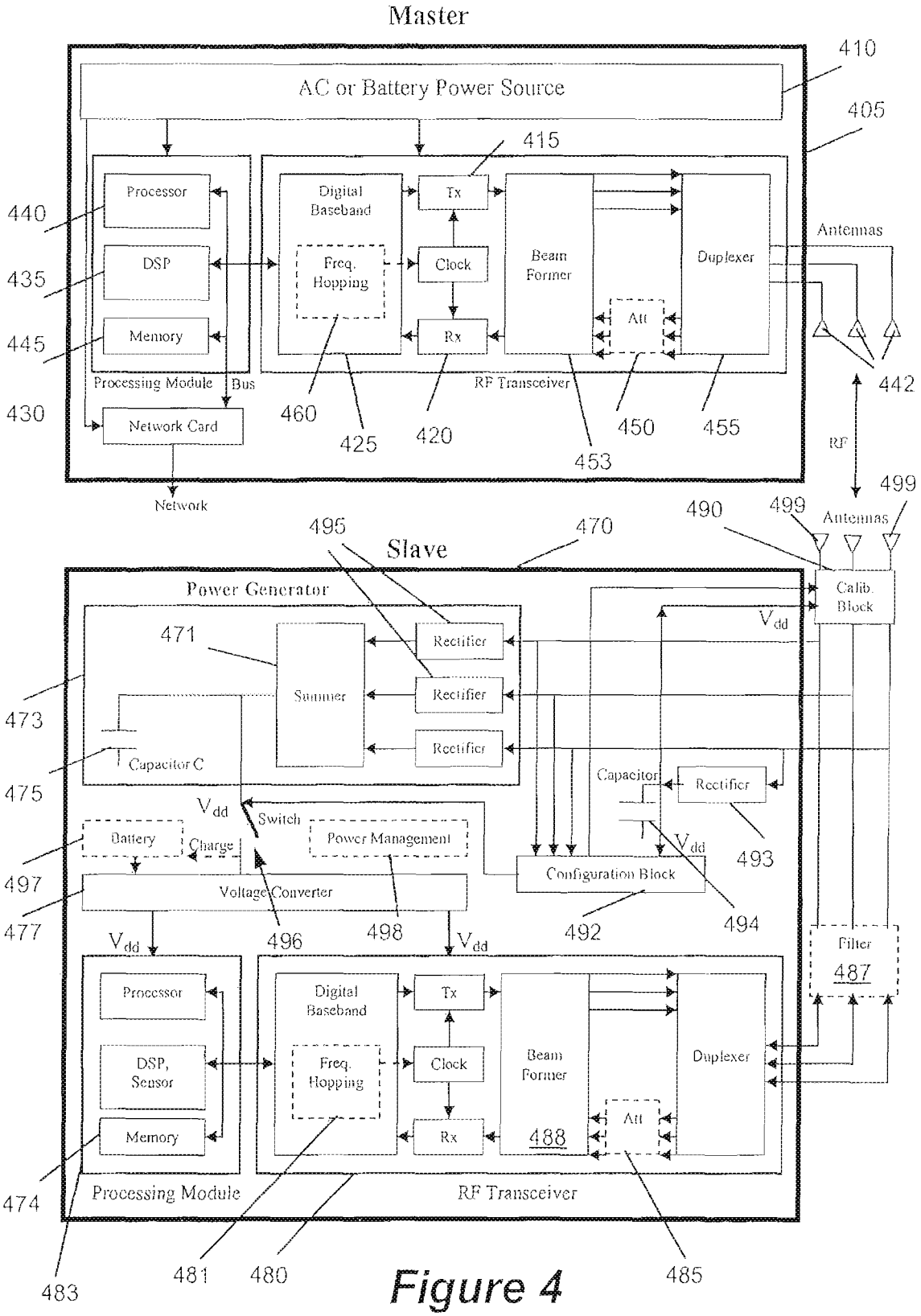
Master
AC or Battery Power Source
410
405
415
Processor
DSP
Memory
Digital Baseband
Freq. Hopping
Tx
Clock
Rx
Beam Former
Att
Duplexer
Antennas
440
435
445
430
Processing Module
Bus
Network Card
Network
RF Transceiver
460
425
420
453
450
455
442
RF
499
490
Antennas
Slave
495
470
Power Generator
Calib. Block
471
Summer
Rectifier
Rectifier
Rectifier
Capacitor C
473
475
Capacitor
Rectifier
Vdd
Switch
Battery
Charge
Power Management
Configuration Block
493
497
Voltage Converter
477
496
498
492
494
Filter
487
Processor
DSP, Sensor
Memory
Digital Baseband
Freq. Hopping
Tx
Clock
Rx
Beam Former
488
Att
Duplexer
474
Processing Module
RF Transceiver
483
481
480
485

Figure 4

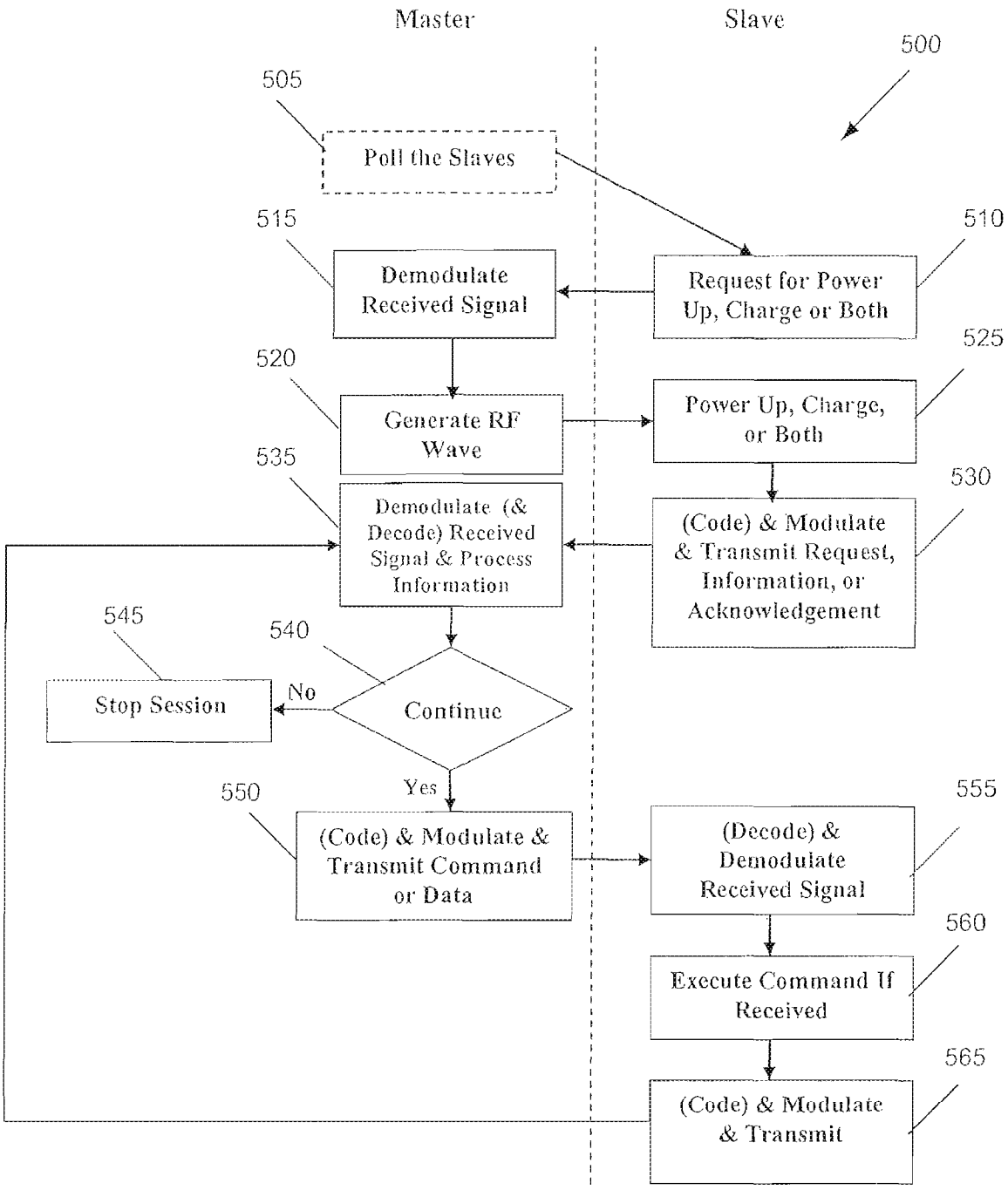
Master
Slave
500
505
Poll the Slaves
515
Demodulate Received Signal
510
Request for Power Up, Charge or Both
520
Generate RF Wave
525
Power Up, Charge, or Both
535
Demodulate (& Decode) Received Signal & Process Information
530
(Code) & Modulate & Transmit Request, Information, or Acknowledgement
545
Stop Session
No
540
Continue
Yes
550
(Code) & Modulate & Transmit Command or Data
555
(Decode) & Demodulate Received Signal
560
Execute Command If Received
565
(Code) & Modulate & Transmit

Figure 5

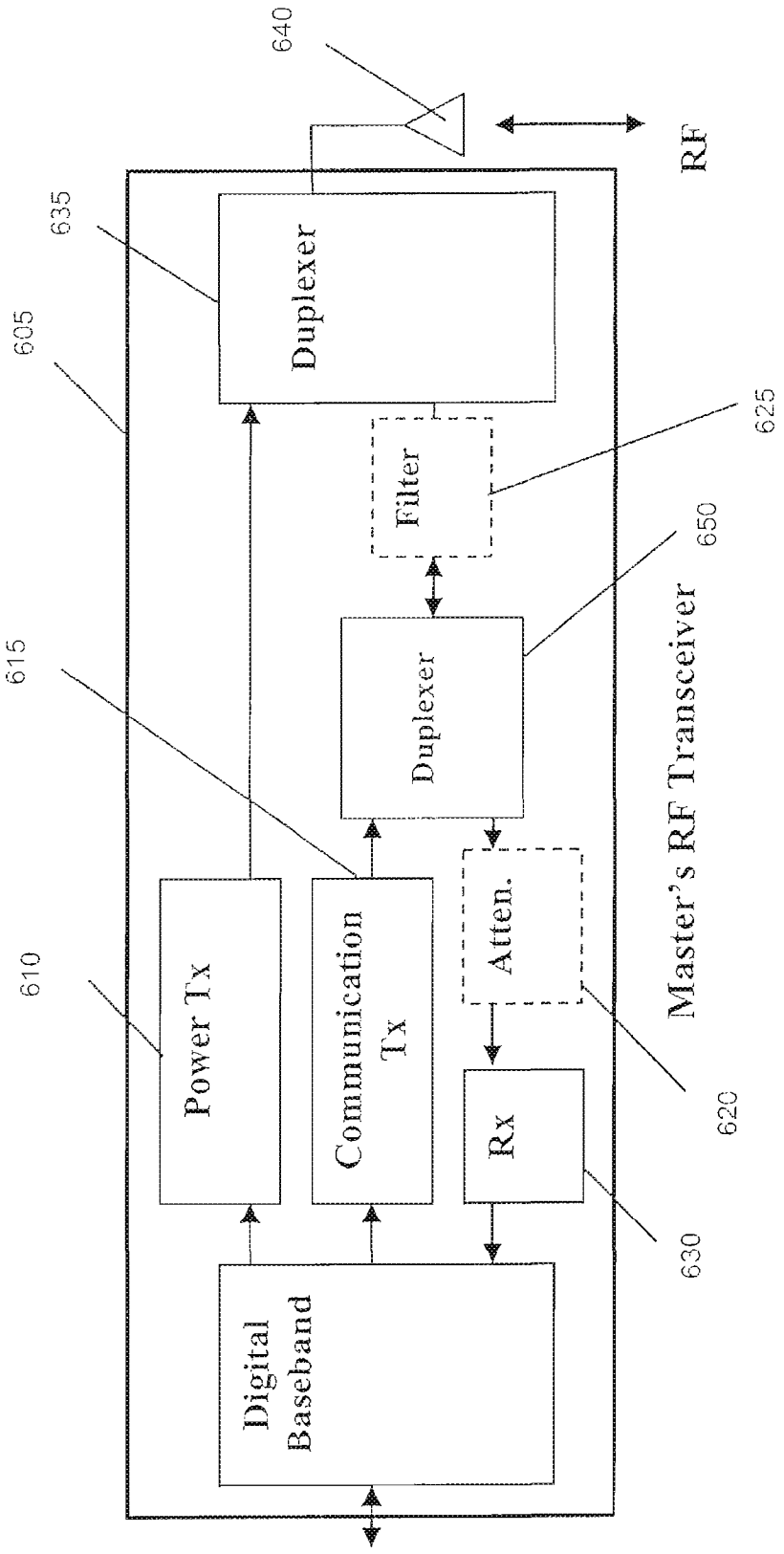
640
RF
635
Duplexer
605
625
Filter
650
Duplexer
615
Master's RF Transceiver
Atten.
610
Power Tx
Communication Tx
620
Rx
630
Digital Baseband

Figure 6

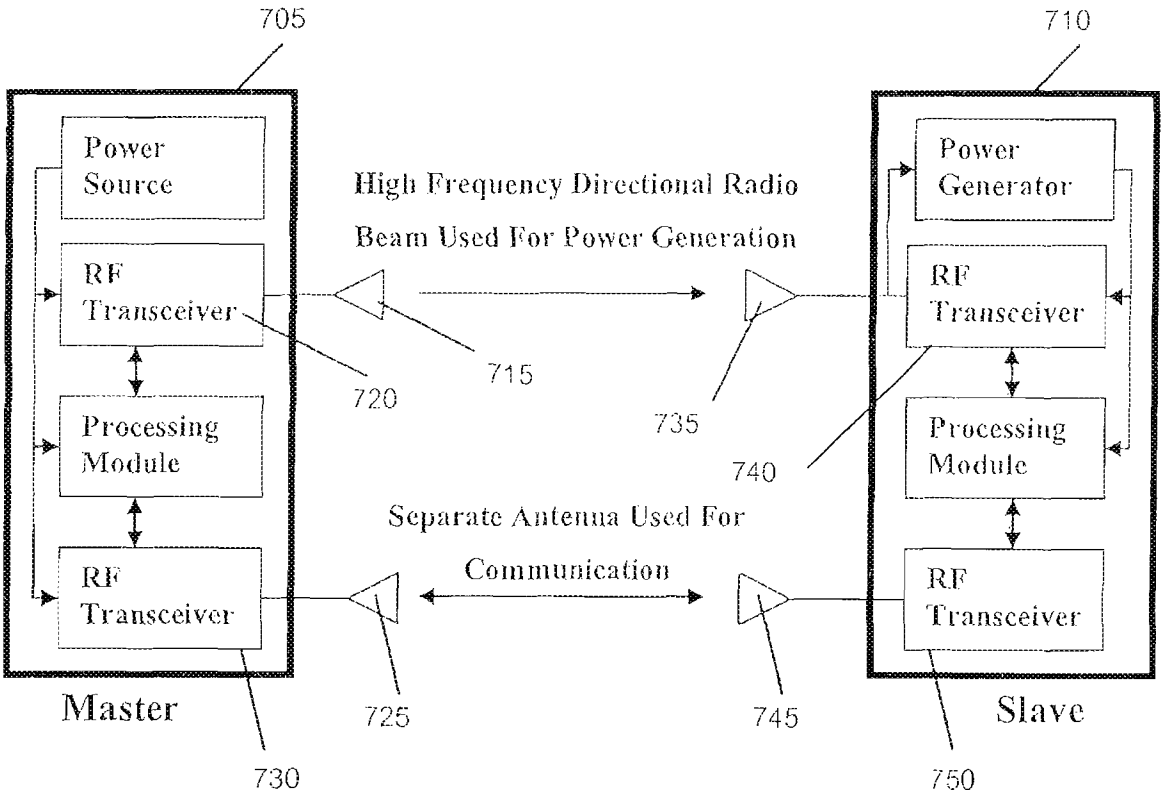
705
710
Power Source
RF Transceiver
Processing Module
RF Transceiver
Master
High Frequency Directional Radio Beam Used For Power Generation
Separate Antenna Used For Communication
Power Generator
RF Transceiver
Processing Module
RF Transceiver
Slave
715
720
735
740
725
745
730
750

Figure 7

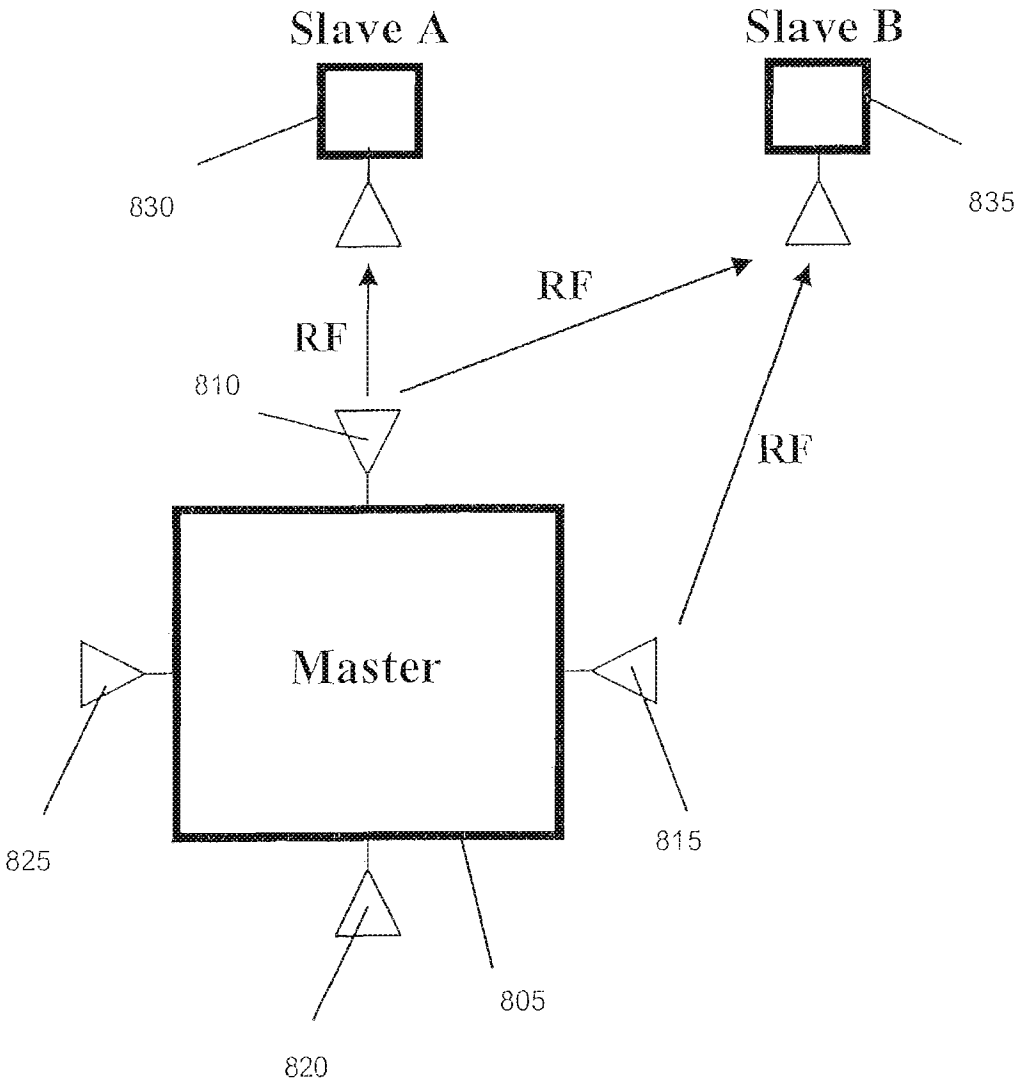

Figure 8

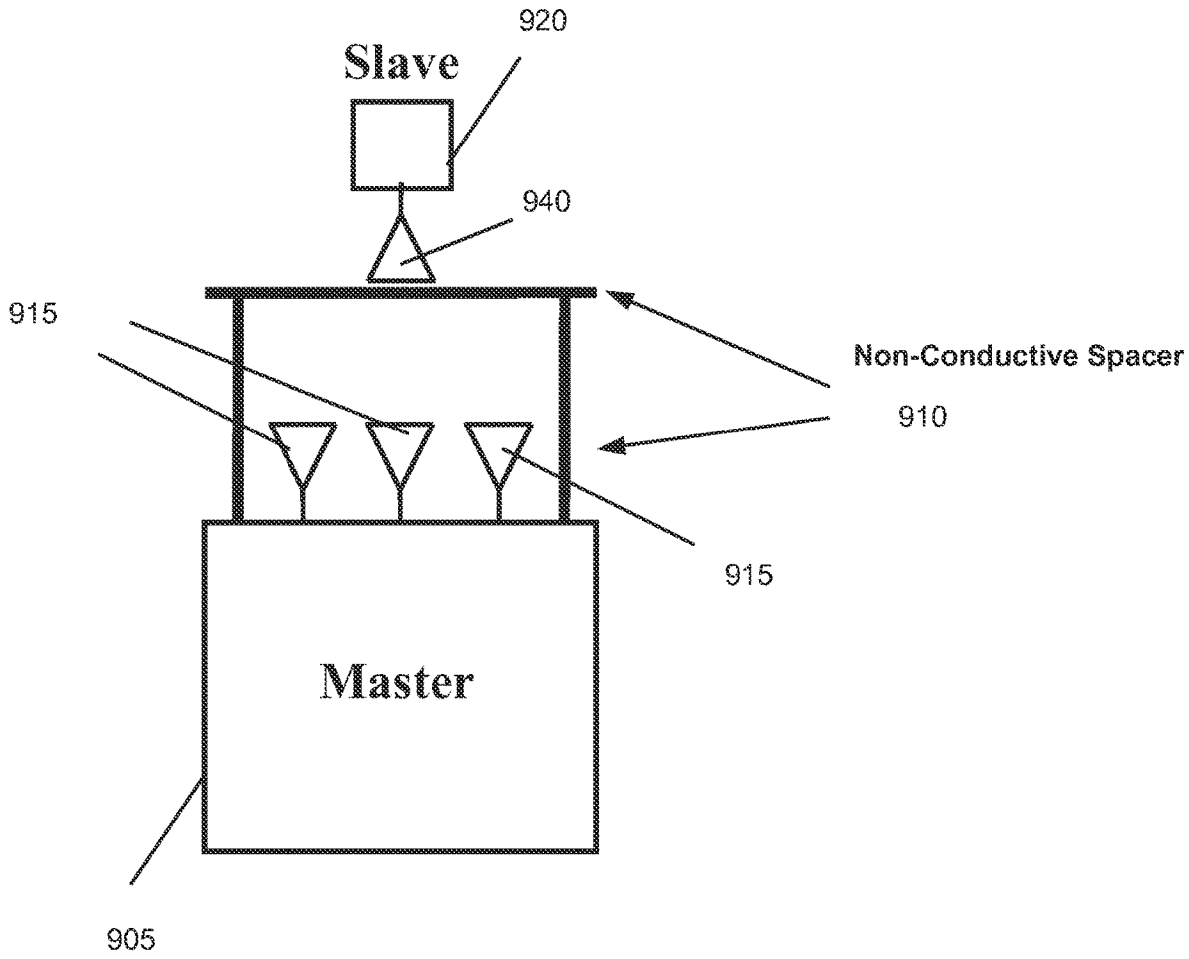

Figure 9

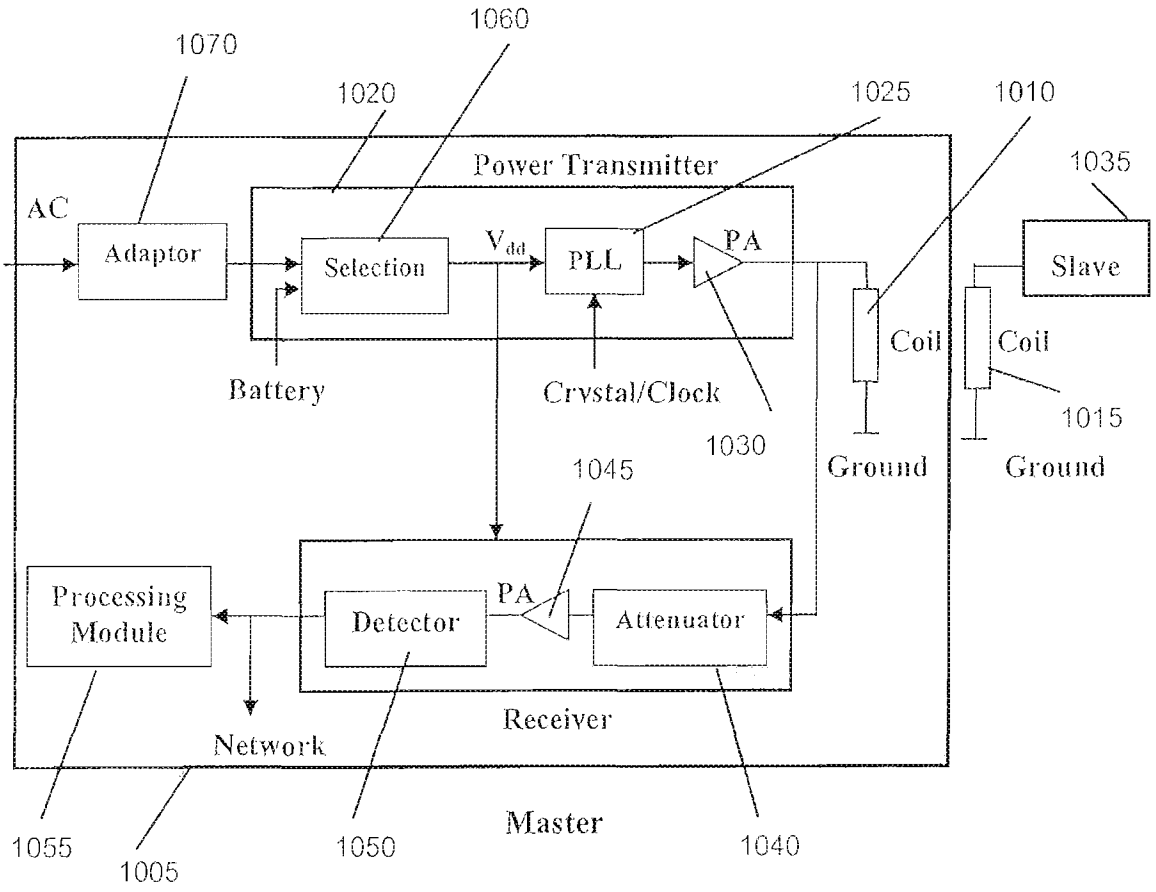
1070
1060
1020
1025
1010
1035
Power Transmitter
AC
Adaptor
Selection
V_{dd}
PLL
PA
Slave
Coil
Coil
Battery
Crystal/Clock
1015
1030
Ground
Ground
1045
Processing Module
Detector
PA
Attenuator
Receiver
Network
Master
1055
1005
1050
1040

Figure 10

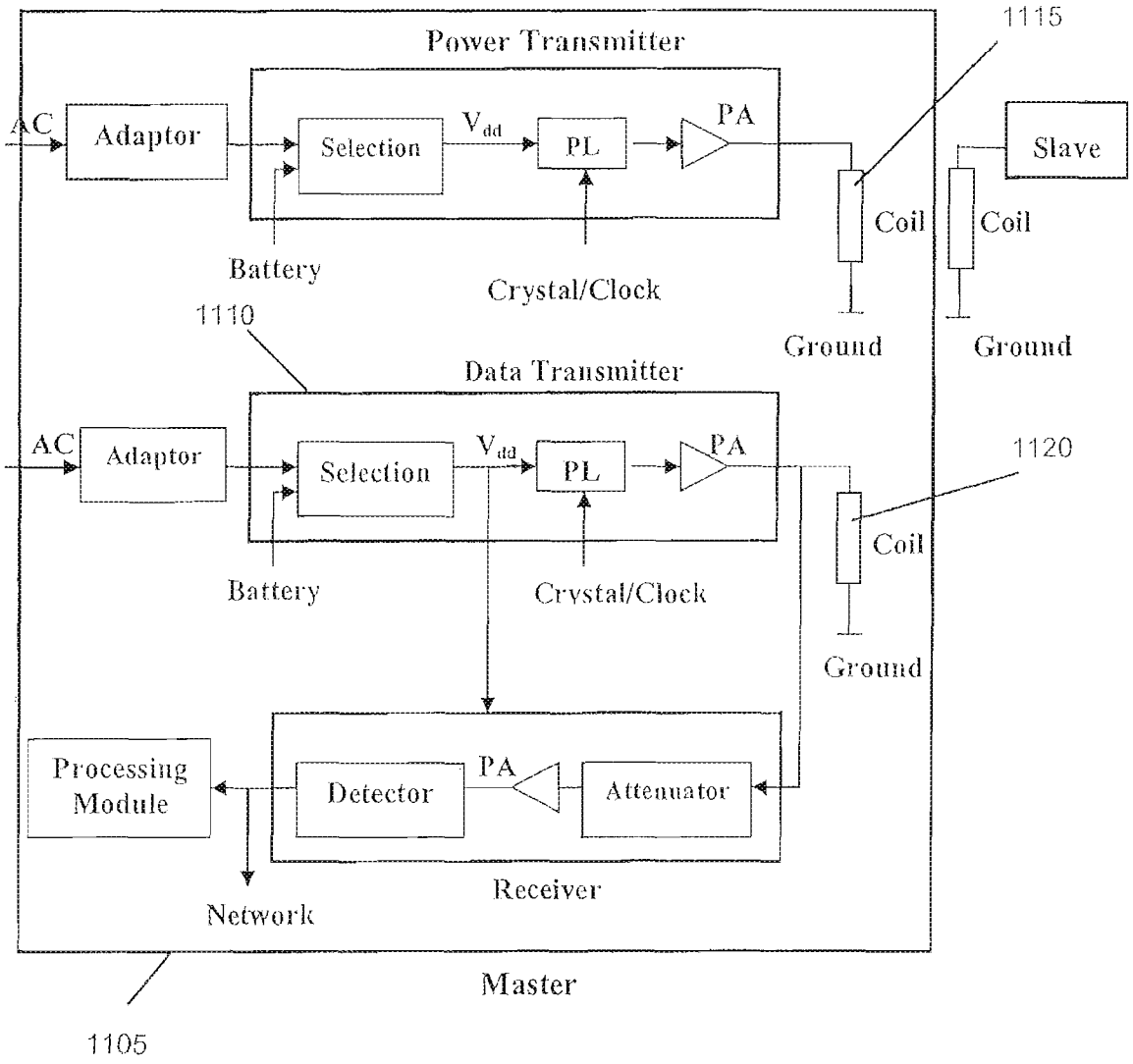
Power Transmitter
1115
AC
Adaptor
Selection
V_{dd}
PL
PA
Slave
Coil
Coil
Battery
Crystal/Clock
1110
Ground
Ground
Data Transmitter
AC
Adaptor
Selection
V_{dd}
PL
PA
1120
Coil
Battery
Crystal/Clock
Ground
Processing Module
Detector
PA
Attenuator
Receiver
Network
Master
1105

Figure 11

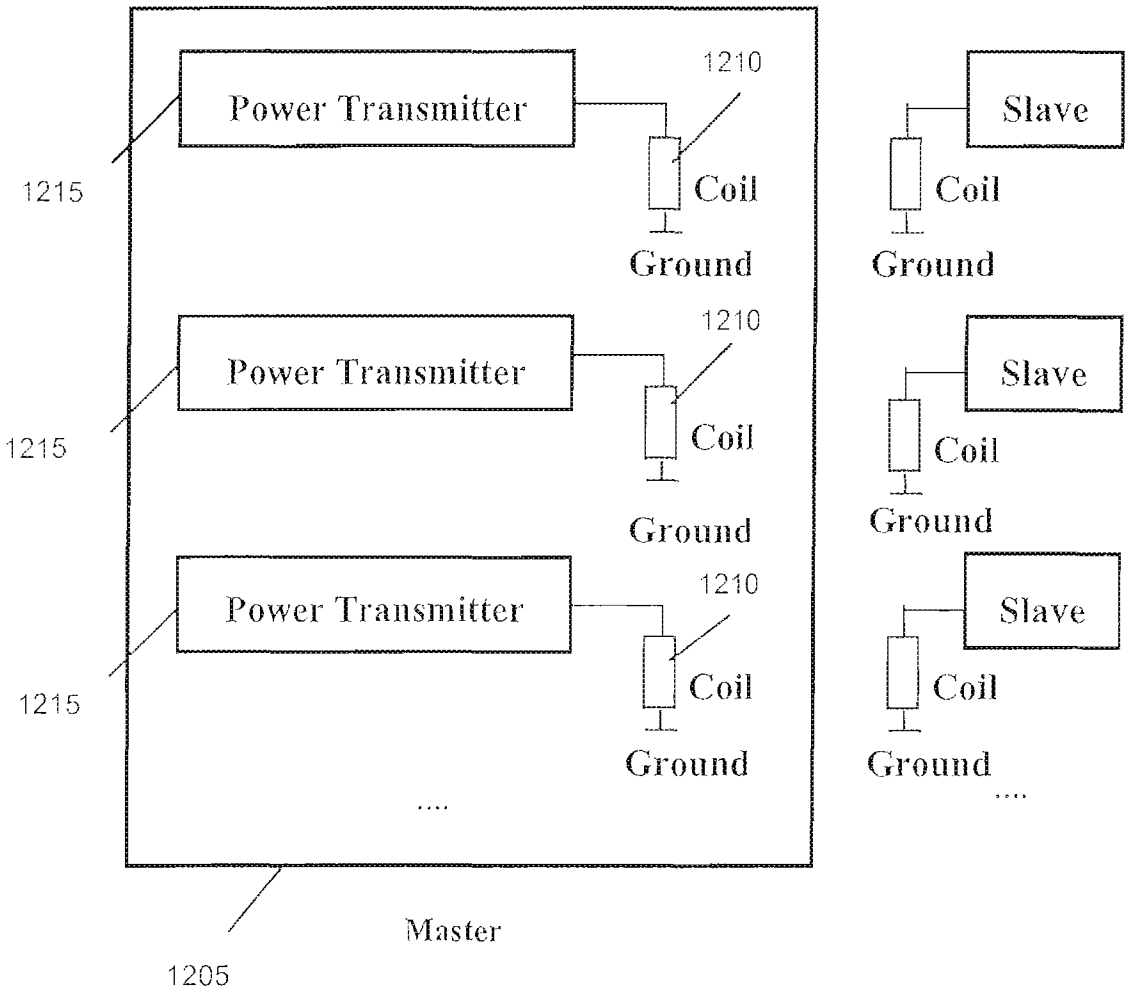
Power Transmitter
1210
Coil
Ground
Slave
Coil
Ground
1215
Power Transmitter
1210
Coil
Ground
Slave
Coil
Ground
1215
Power Transmitter
1210
Coil
Ground
Slave
Coil
Ground
1215
....
....
Master
1205

Figure 12

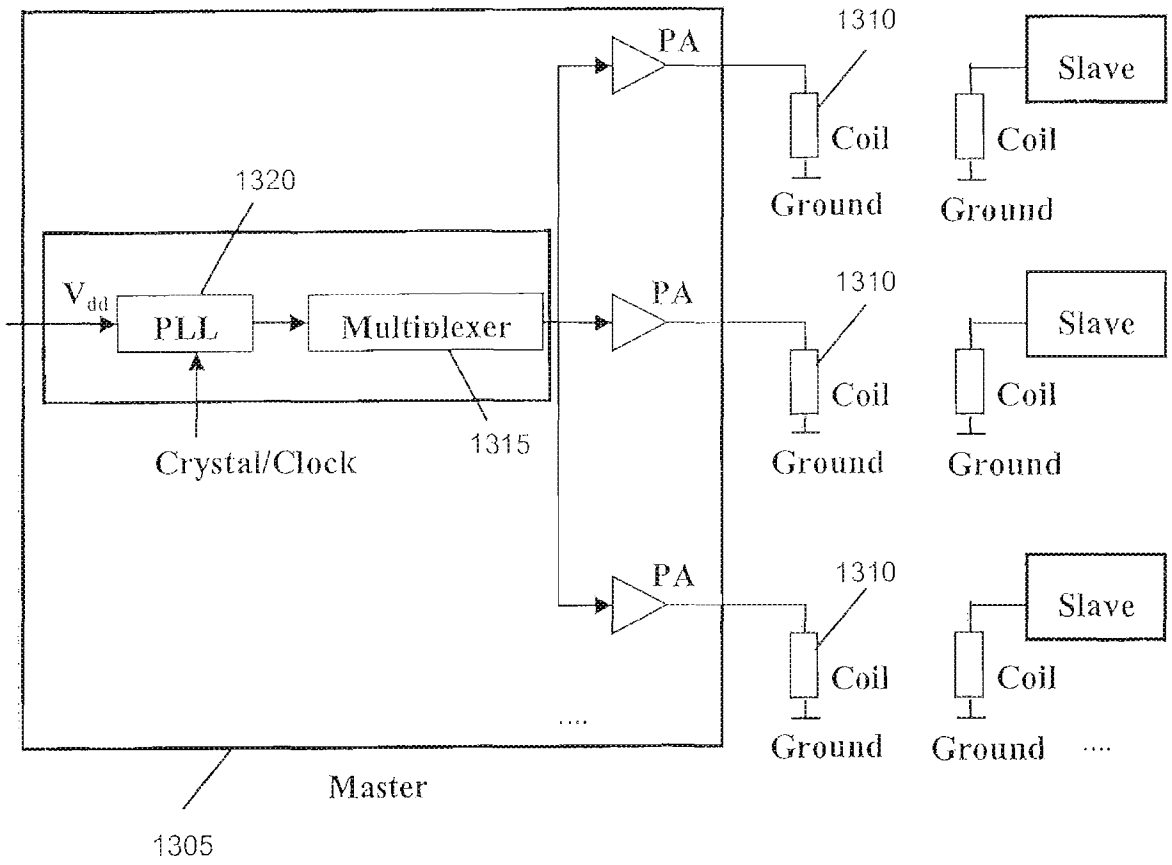
1310
PA
Coil
Ground
Slave
Coil
Ground
1320
V_{dd}
PLL
Multiplexer
1315
Crystal/Clock
PA
1310
Coil
Ground
Slave
Coil
Ground
PA
1310
Coil
Ground
Slave
Coil
Ground
....
Master
1305

Figure 13

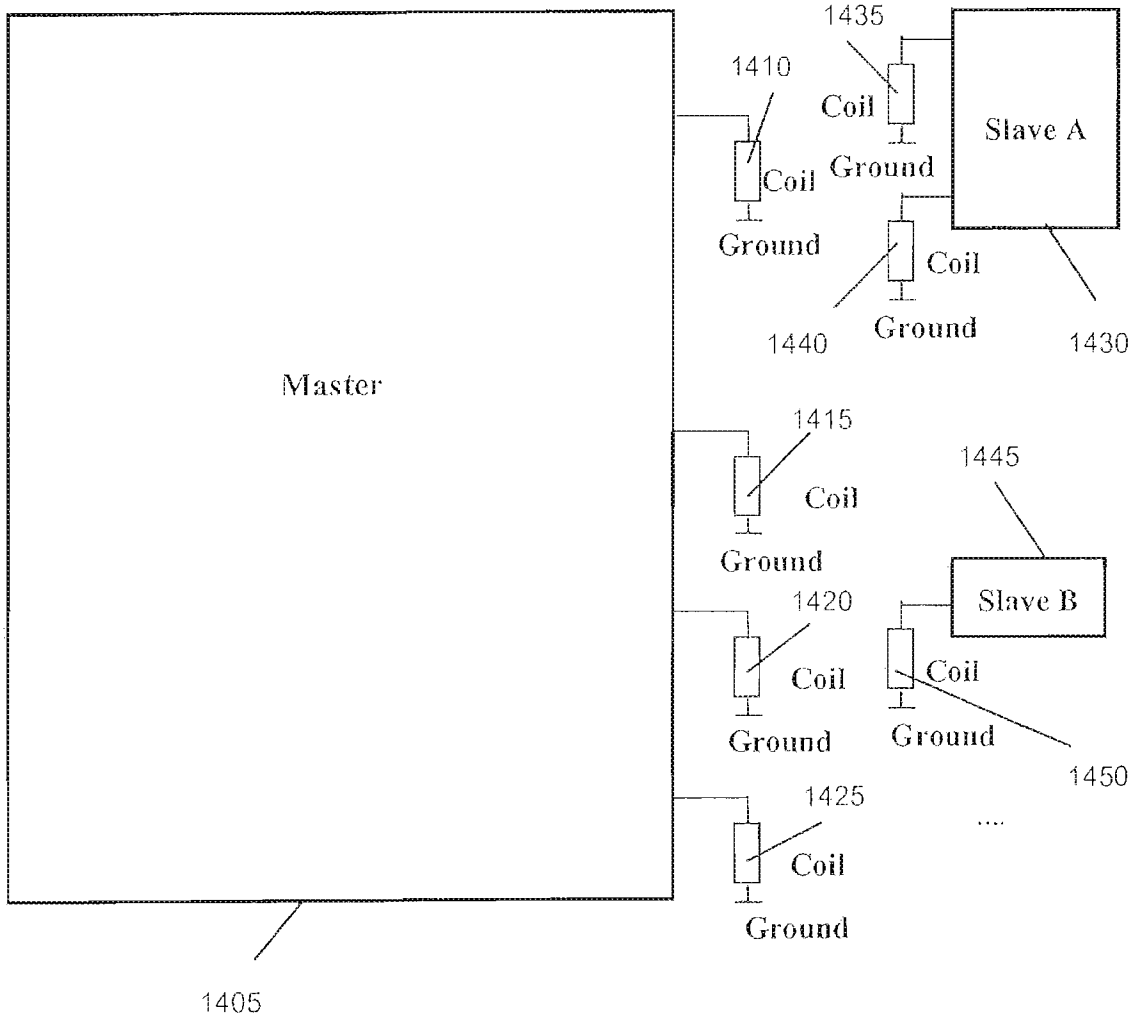
1435
1410
Coil
Slave A
Coil
Ground
Ground
Coil
1440
Ground
1430
Master
1415
1445
Coil
Ground
Slave B
1420
Coil
Coil
Ground
Ground
1450
1425
....
Coil
Ground
1405

Figure 14

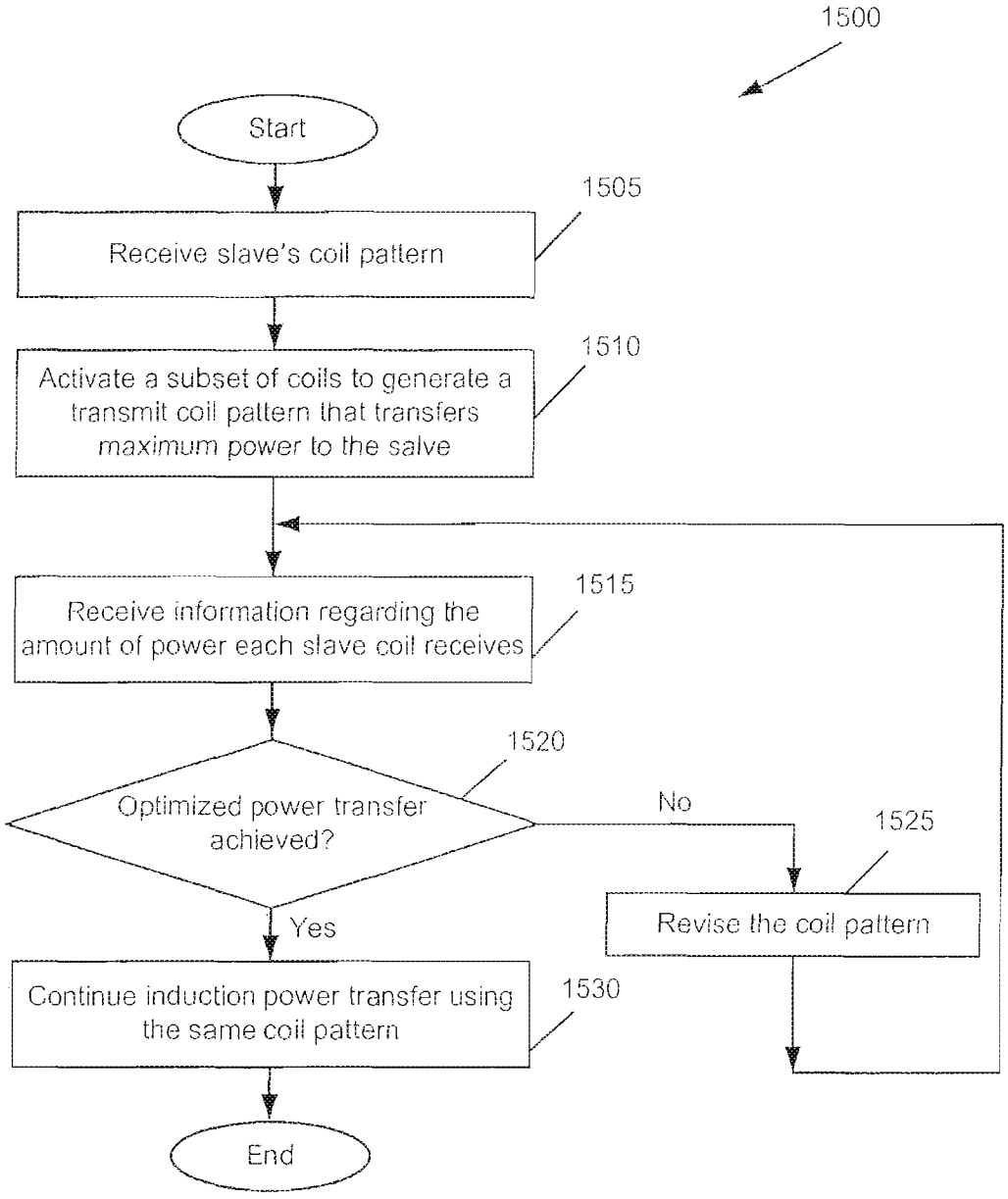
1500
Start
1505
Receive slave's coil pattern
1510
Activate a subset of coils to generate a transmit coil pattern that transfers maximum power to the salve
1515
Receive information regarding the amount of power each slave coil receives
1520
Optimized power transfer achieved?
No
1525
Revise the coil pattern
Yes
1530
Continue induction power transfer using the same coil pattern
End

Figure 15

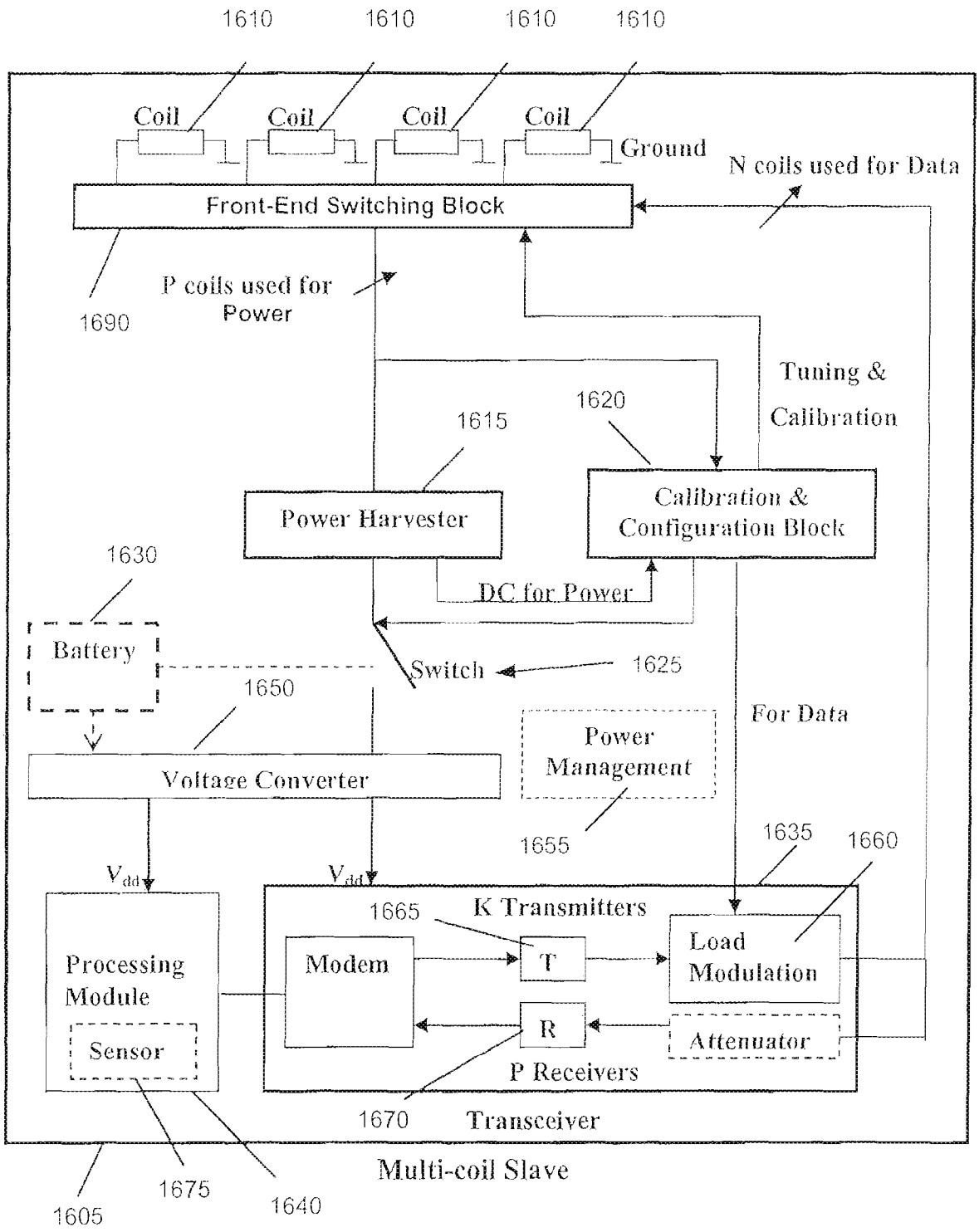
1610
1610
1610
1610
Coil
Coil
Coil
Coil
Ground
N coils used for Data
Front-End Switching Block
1690
P coils used for Power
Tuning & Calibration
1620
1615
Power Harvester
Calibration & Configuration Block
1630
DC for Power
Battery
Switch
1625
1650
For Data
Power Management
Voltage Converter
1655
1635
1660
V_{dd}
V_{dd}
1665
K Transmitters
Processing Module
Modem
T
Load Modulation
Sensor
R
Attenuator
P Receivers
1670
Transceiver
Multi-coil Slave
1605
1675
1640

Figure 16

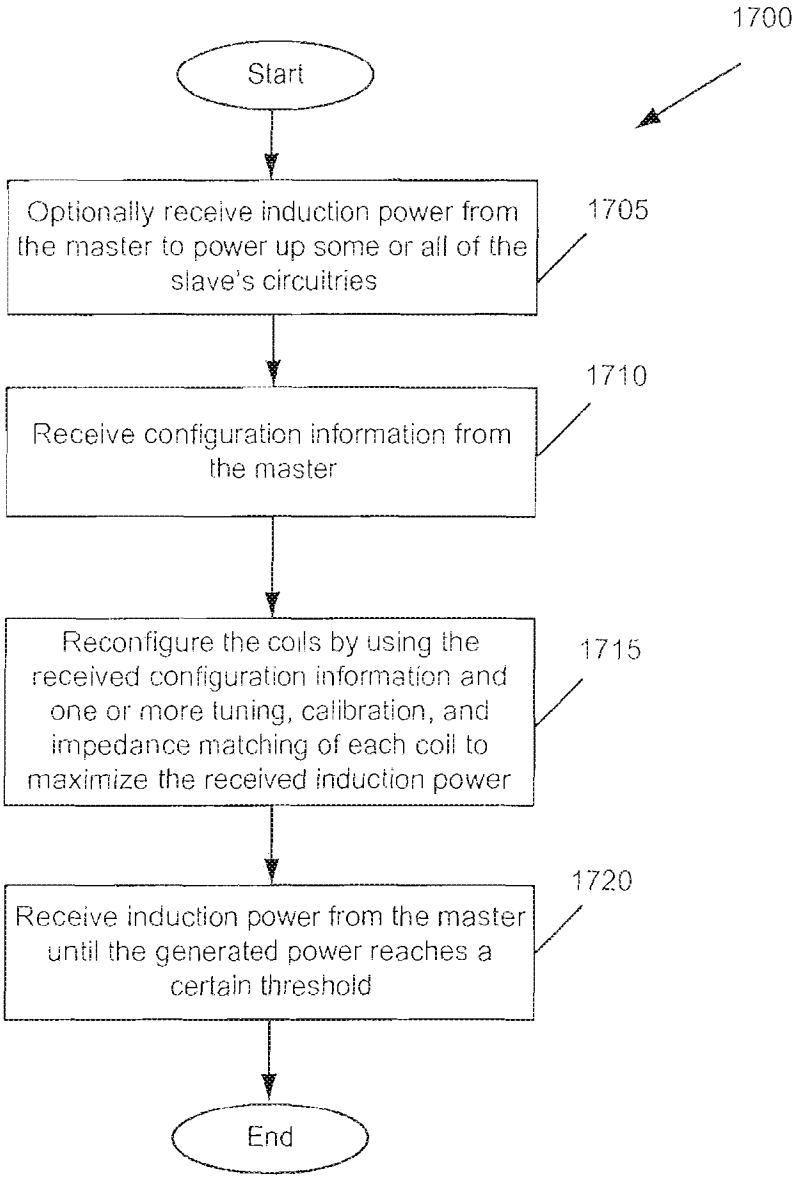
1700
Start
Optionally receive induction power from the master to power up some or all of the slave's circuitries
1705
Receive configuration information from the master
1710
Reconfigure the coils by using the received configuration information and one or more tuning, calibration, and impedance matching of each coil to maximize the received induction power
1715
Receive induction power from the master until the generated power reaches a certain threshold
1720
End

Figure 17

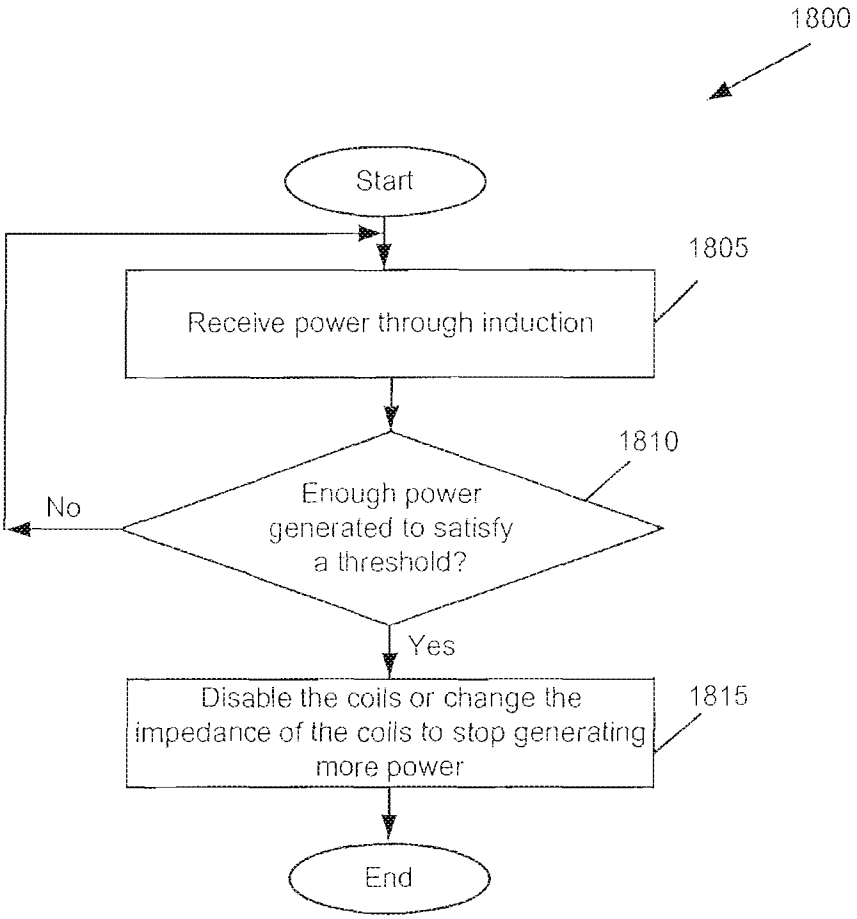
1800
Start
1805
Receive power through induction
1810
Enough power generated to satisfy a threshold?
No
Yes
1815
Disable the coils or change the impedance of the coils to stop generating more power
End

Figure 18

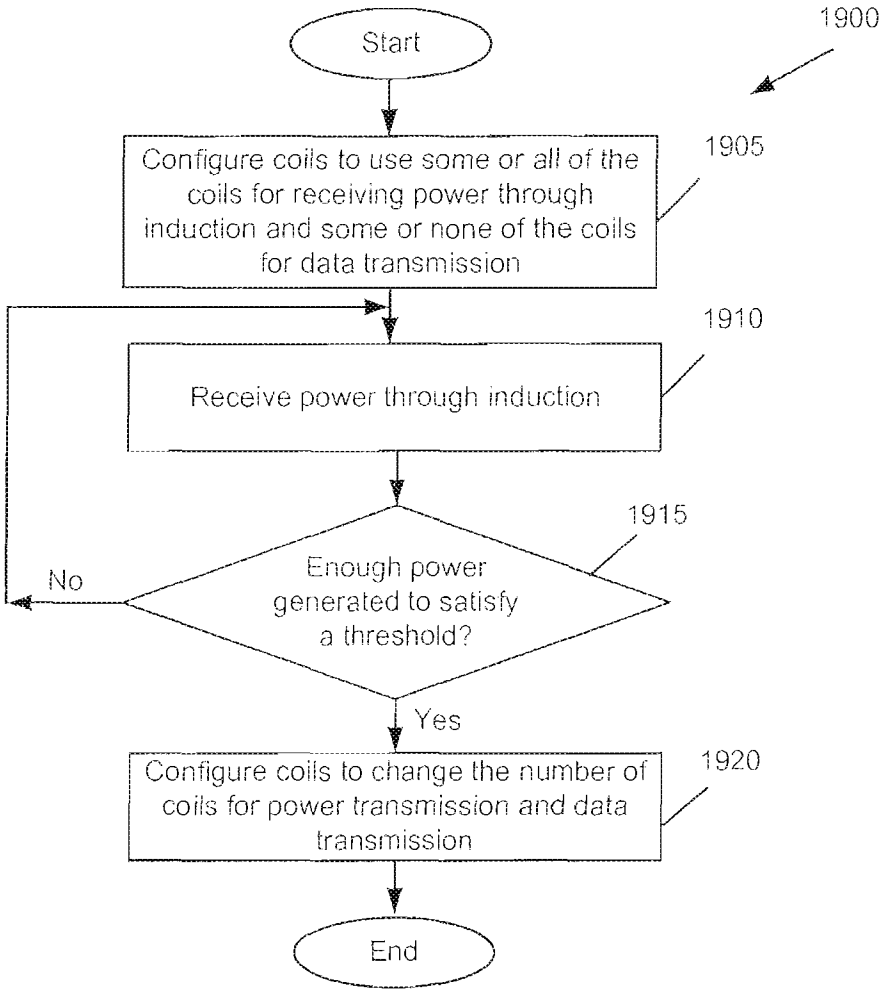
1900
Start
Configure coils to use some or all of the coils for receiving power through induction and some or none of the coils for data transmission
1905
Receive power through induction
1910
Enough power generated to satisfy a threshold?
1915
No
Yes
Configure coils to change the number of coils for power transmission and data transmission
1920
End

Figure 19

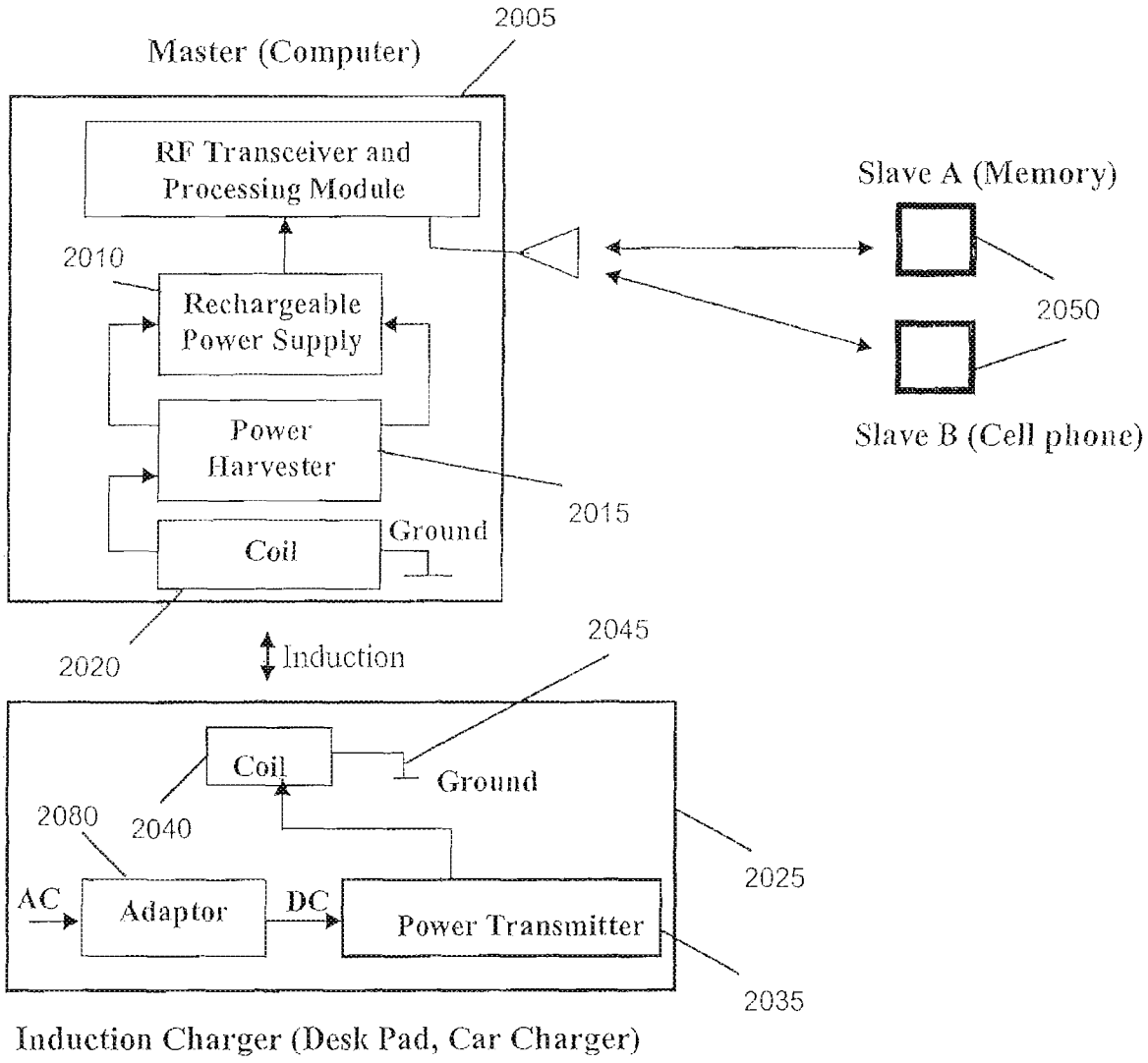
2005
Master (Computer)
RF Transceiver and Processing Module
2010
Rechargeable Power Supply
Power Harvester
2015
Coil
Ground
2020
Induction
Slave A (Memory)
2050
Slave B (Cell phone)
2045
Coil
Ground
2080
2040
2025
AC
Adaptor
DC
Power Transmitter
2035
Induction Charger (Desk Pad, Car Charger)

Figure 20

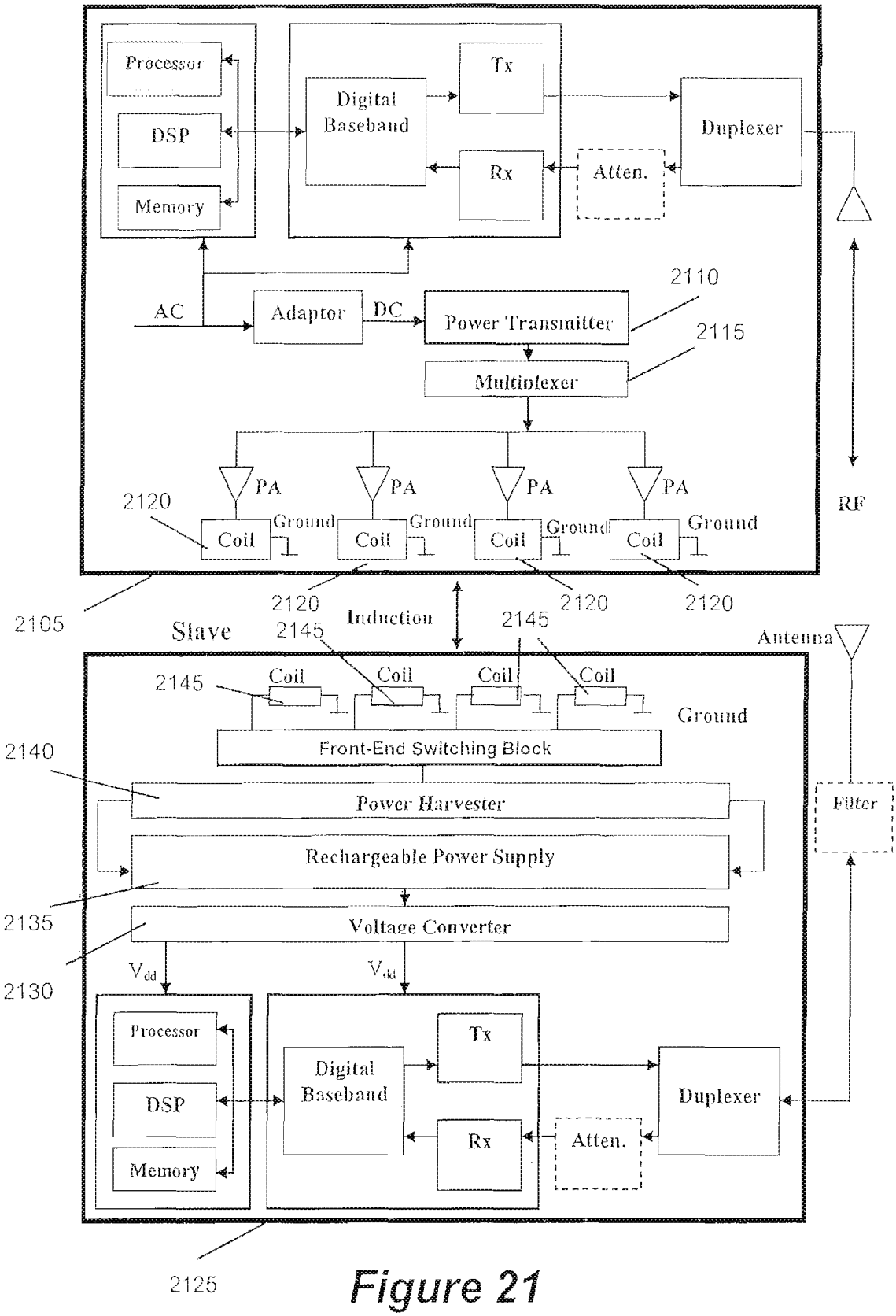
Processor
DSP
Memory
Digital Baseband
Tx
Rx
Atten.
Duplexer
AC
Adaptor
DC
Power Transmitter
2110
2115
Multiplexer
PA
PA
PA
PA
2120
Coil
Ground
Coil
Ground
Coil
Ground
Coil
Ground
RF
2105
Slave
2120
2120
2120
Induction
2145
2145
Antenna
2145
Coil
Coil
Coil
Coil
Ground
2140
Front-End Switching Block
Power Harvester
Filter
Rechargeable Power Supply
2135
Voltage Converter
2130
Vdd
Vdd
Processor
DSP
Memory
Digital Baseband
Tx
Rx
Atten.
Duplexer
2125

Figure 21

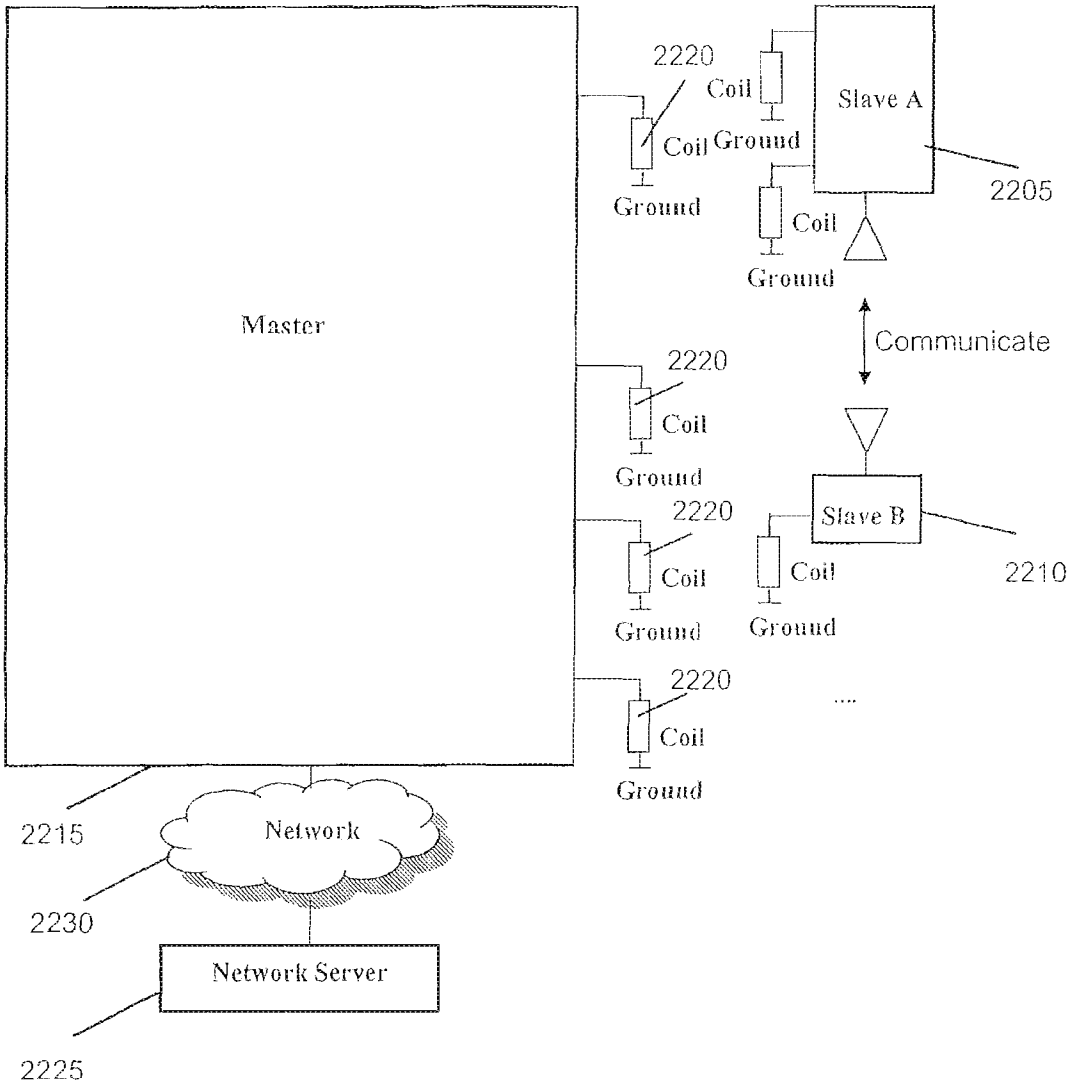
Master
2220
Coil
Ground
Slave A
2205
Communicate
Slave B
2210
....
2215
Network
2230
Network Server
2225

Figure 22

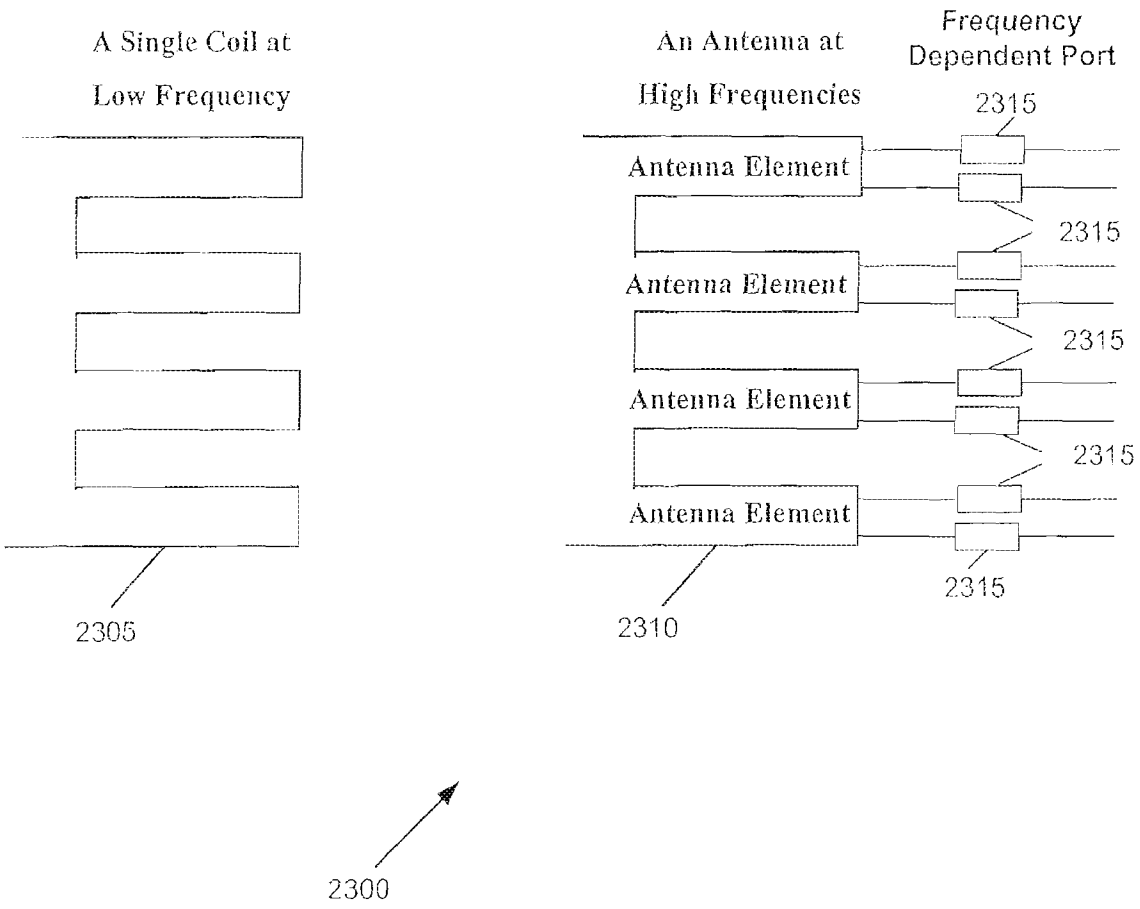
A Single Coil at
Low Frequency
An Antenna at
High Frequencies
Frequency
Dependent Port
2315
Antenna Element
2315
Antenna Element
2315
Antenna Element
2315
Antenna Element
2315
2305
2310
2300

Figure 23

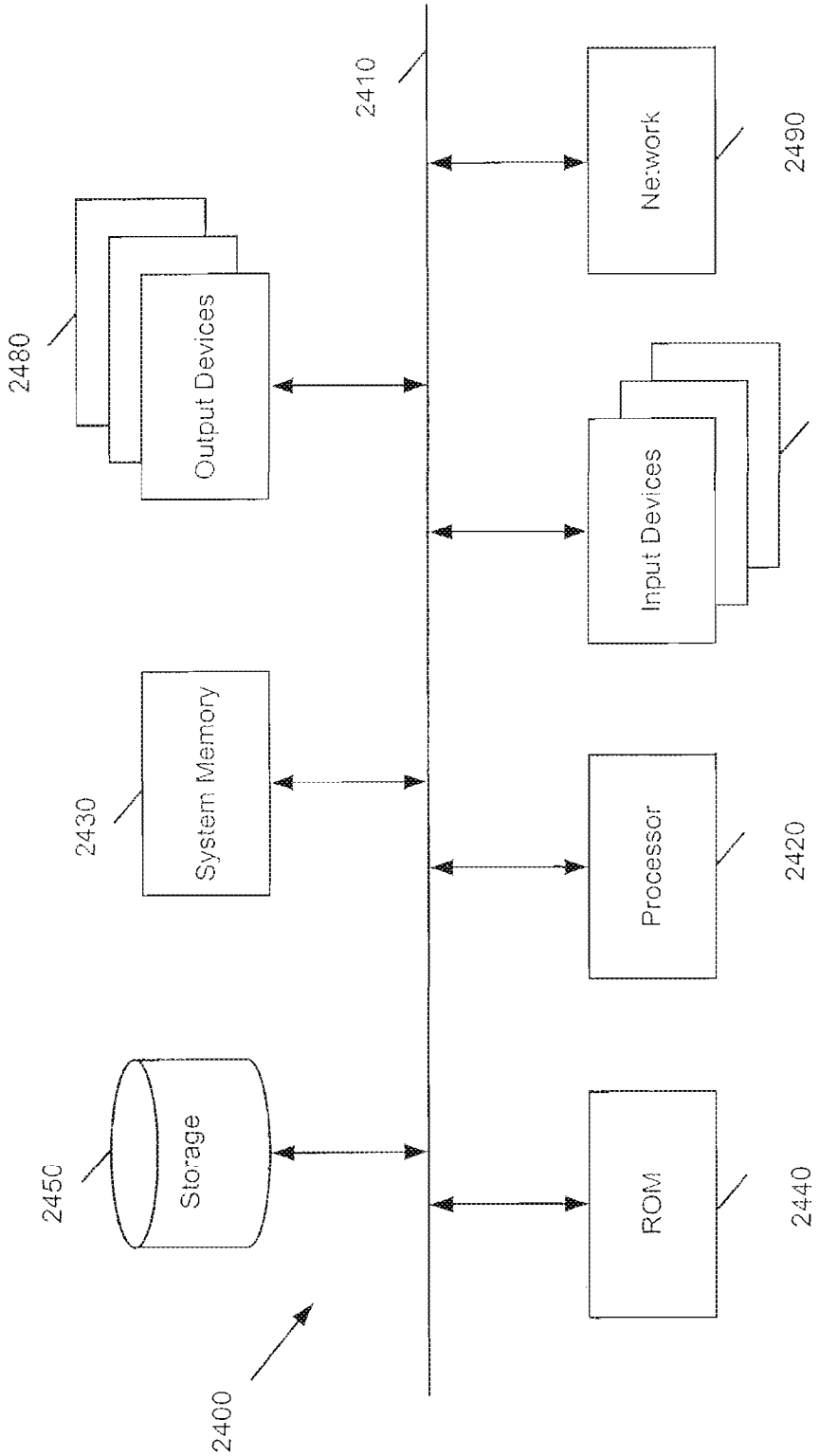
2410
Network
2490
2480
Output Devices
Input Devices
2470
System Memory
2430
Processor
2420
Storage
2450
ROM
2440
2400

Figure 24

METHOD AND APPARATUS FOR CHARGING A BATTERY-OPERATED DEVICE

CLAIM OF BENEFIT TO RELATED APPLICATIONS

The present application is a continuation application of U.S. patent application Ser. No. 16/436,824, entitled "Portable Pad for Wireless Charging," filed Jun. 10, 2019, which is a continuation application of U.S. patent application Ser. No. 15/610,379, entitled "Portable Pad for Wireless Charging," filed May 31, 2017, now U.S. Pat. No. 10,355,531, which is a continuation application of U.S. patent application Ser. No. 15/263,629, entitled "Selective Wireless Charging of Authorized Slave Devices," filed Sep. 13, 2016, now U.S. Pat. No. 9,847,670, which is a continuation application of U.S. patent application Ser. No. 14/223,841, entitled "Method and Apparatus for Wirelessly Transferring Power and Communicating with One or More Slave Devices," filed Mar. 24, 2014, now U.S. Pat. No. 9,608,472, which is itself a continuation application of U.S. patent application Ser. No. 12/979,254, entitled "Method and apparatus for wirelessly transferring power and communicating with one or more slave devices," filed Dec. 27, 2010, now U.S. Pat. No. 8,686,685. U.S. patent application Ser. No. 12/979,254 claims the benefit of and priority to U.S. Provisional Patent Application 61/290,184, entitled, "Master Device that Wirelessly Transfers Power and Communicates with a Plurality of Slave Devices," filed Dec. 25, 2009. The contents of all of the above-identified applications are hereby incorporated fully by reference into the present application.

BACKGROUND

Induction is a common form for wireless power. Non resonant induction systems like transformers use a primary coil to generate a magnetic field. A secondary coil is then placed in that magnetic field and a current is induced in the secondary coil. Induction, however, has the disadvantage that the receiver must be very close to the transmitter in order to inductively couple to it. At large distances induction wastes most of the energy in the resistive losses of the primary coil. Resonant inductive coupling improves energy transfer efficiency at larger distances by using two coils that are highly resonant at the same frequency. However, both non-resonant and resonant induction wireless power methods are non-directive and irradiate the space around them. This can be disadvantage in some situations since there are regulations that limit human exposure to alternating magnetic fields because of concern for biological impacts on the users. Also, since they use low frequencies (KHz to 7 MHz) they cannot be used for high speed communication.

BRIEF SUMMARY

The preceding Summary is intended to serve as a brief introduction to some embodiments of the invention. It is not meant to be an introduction or overview of all inventive subject matter disclosed in this document. The Detailed Description that follows and the Drawings that are referred to in the Detailed Description will further describe the embodiments described in the Summary as well as other embodiments. Accordingly, to understand all the embodiments described by this document, a full review of the Summary, Detailed Description and the Drawings is needed.

Moreover, the claimed subject matters are not to be limited by the illustrative details in the Summary, Detailed Description and the Drawing, but rather are to be defined by the appended claims, because the claimed subject matters can be embodied in other specific forms without departing from the spirit of the subject matters.

Some embodiments provide a wireless transmitter that uses radio frequencies (RF) with small high gain directive antennas and high frequency radio waves or electromagnetic induction to charge one or more receiving devices and then communicate with them. Wireless communication is convenient because it allows devices to connect to each other without wires. Wireless power is convenient because it removes the need for wires and connectors. This invention combines these two aspects together.

Some embodiments use radio frequency (RF) instead of resonant electromagnetic induction to charge and communicate with slave devices. Throughout this specification the 60 GHz spectrum is used for describing the RF charging aspect of this invention. However, 60 GHz is only one special case of using higher frequencies for implementing this invention. In the U.S. the 60 GHz spectrum band can be used for unlicensed short range data links (1.7 km) with data throughputs up to 2.5 Gbits/s. Higher frequencies such as the 60 GHz spectrum experience strong free space attenuation. The smaller wavelength of such high frequencies also enables the use of small high gain antennas with small beam widths. The combination of high attenuation and high directive antenna beams provides better frequency reuse so that the spectrum can be used more efficiently for point-to-multipoint communications. For example, a larger number of directive antennas and users can be present in a given area without interfering with one another, compared to less directive antennas at lower frequencies. Small beam width directive antennas also confine the electromagnetic waves to a smaller space and therefore limit human exposure. The higher frequencies also provide more bandwidth and allow more information to be wirelessly transmitted. Thus, the same antenna can be used to for power generation and communication.

There are several standards bodies that are using high frequencies such as 60 GHz. These include WirelessHD, WiGig, and WiFi IEEE 802.11ad. The WirelessHD specification is based on the 7 GHz of continuous bandwidth around the 60 GHz radio frequency and allows for digital transmission of uncompressed high definition (HD) video, audio and data. It is aimed at consumer electronics applications and provides a digital wireless interface for file transfers, wireless display and docking, and lossless HD media streaming for ranges up to 10 meters. Theoretically it can support data rates as high as 25 Gbit/s. The 60 GHz band usually requires line of sight between transmitter and receiver because of high absorption. The WirelessHD specification gets around this limitation by using beam forming at the transmitter and receiver antennas to increase effective power of the signal.

The WiGig standard (short for the "Wireless Gigabit Alliance") is also promoting high speed wireless communication over the unlicensed 60 GHz spectrum and is a competing standard to WirelessHD. The WiGig standard is also taking advantage of the high absorption of 60 GHz that limits signal propagation and reduces interference with other wireless systems.

IEEE 802.11ad is also under development by the IEEE task group for the upcoming 60 GHz standard. This is essentially a faster version of the IEEE 802.11 standard that

uses the 60 GHz band. However, because it uses a new spectrum it will not be backward compatible with existing WiFi.

Wireless USB is a standard which does not use 60 GHz. Wireless USB uses the Ultra-wideBand (UWB) radio platform that operates in the 3.1 to 10.6 GHz frequency and can transmit 480 Mbit/s at distances up to 3 meters and 110 Mbit/s at up to 10 meters. While the goal of 802.11 family (802.11*) WiFi is to replace Ethernet cables and provide wireless Internet access, the goal of Wireless USB is to remove the cables from USB based PC peripherals. Wireless USB can be used for printers, scanners, digital cameras, MP3 players, game controllers, hard disks, and flash drives. Both WirelessHD and WiGig are competing in some aspects with the Wireless USB standard. Inductive Charging in some embodiments is performed at lower frequencies such as frequencies of less than 100 MHz, whereas RF frequencies used in some embodiments is greater than 900 MHz or 1 GHz. The higher the RF frequencies, the smaller the wavelength and hence the smaller the size of the antenna.

None of the above standards address charging slave devices before communicating with them. Instead they assume that the slaves have access to some power source such as AC power or a battery. In some embodiments a master device uses one or more directional antennas or uses antenna array beam forming to transmit high frequency RF signals to one or more slave devices to power them up or charge their batteries. By using the directional antennas or using antenna array beam forming, these embodiments concentrate the power on a smaller area.

Some embodiments provide a networked system with a master device that can power-up or charge a plurality of slave devices and communicate with them. In some embodiments the master is connected to other network devices and/or Intranet/Internet though packet-based or non packet based networks and wired or wireless networks (such as Bluetooth®, Wireless Local Area Network (WLAN), fourth generation (4G) cellular, Code Division Multiple Access (CDMA), Time Division Multiple Access (TDMA), Worldwide Interoperability for Microwave Access (WiMAX), UWB and 60 GHz). The master in some embodiments monitors the power status of a plurality of slaves, decides which subset of those slaves get charged and what their charging priorities are. The slaves in some embodiments have different power status and capabilities (some have power to communicate, while others have low battery, and yet others have no battery).

In some embodiments, the slave has sensors (e.g. temperature, gyrator, pressure, and heart monitor) with electronic circuitry that are powered up by the master, perform their sensing functions and communicate their data to the master, a network server, or some other device. The channel for power transfer in some embodiments is RF or electromagnetic induction. A control channel is used in some embodiments by the master to send commands to the slaves. Some embodiments use the same channel for power, control, and communication. One, two or all of the power, control, and communication in some embodiments use different channels (e.g. different frequencies, different radios, different antenna, and different coils for induction) or different methods (RF Beam and induction).

In some embodiments, the master configures the system to increase power and communication efficiency (e.g. uses several antenna and beam steering for RF, or several coils and coil pattern optimization for induction). In some embodiments the master and the slave have a matrix of coils (for induction) and the master changes it's transmit coil pattern in order to optimize power transfer to the slave. Several masters in some embodiments cooperate or are configured by a network server or remote user to use beam steering and different antennas to charge a plurality of slaves. In some embodiments the slaves provide their identifying information and register themselves in a slave information database. In some embodiments the masters provide their identifying information and register themselves in a master information database. The master in some embodiments receives a slave's identifying information (MAC ID, network Internet protocol (IP) address, name, serial number, product name and manufacturer, capabilities, etc.) by communicating with the slave or by examining the slave information database to select which slaves to power up, charge, or communicate with. A slave in some embodiments prevents non-authorized masters (or networked servers) from trying to charge it or power it up by checking the master's identifying information with the authorized master's list stored on the slave. The master's selection and power scheduling of slaves is dependent on the priorities of slaves' functions and data in some embodiments.

In some embodiments, the master uses frequency hopping and time hopping to select some slaves from a plurality of slaves. A master in some embodiments charges a slave to a pre-set high level, then communicates with it until battery falls to a pre-set low level, and then charges slave again, etc. A master in some embodiments powers-up/charges a slave's battery and communicate with the slave at the same time. In some embodiments a slave that is powered up gets connected to a network (packet-based or non packet based, wired or wireless such as Bluetooth®, WLAN, 4G cellular, CDMA, TDMA, WiMax, UWB and 60 GHz) through the master, through other nearby slaves, or directly to an access point/tower.

A master that does not have a network connection in some embodiments charges a slave and uses the slave's network connection to connect to the network and perform networked operations such as downloading software and driver upgrades. In some embodiments a slave that is powered up and charged becomes a master charger for other slaves.

The master and the slave optionally have a touch screen and/or keyboard for entering data which can be displayed on the screen and/or communicated, respectively, to the slave and the master in some embodiments. A network server that is connected to the master is effectively the real master in some embodiments and instructs the master, monitors the power status of a plurality of slaves, decides which subset of those slaves are powered up/charged/communicate with, and what their priorities are. Also, an authorized remote user in some embodiments uses the network to connect to the network server and control the network server, which in turn instructs the masters to monitor the power status of a plurality of slaves, decide which subset of those slaves are powered up/charged/communicate with, and what their priorities are.

A non-conductive spacer is used in some embodiments to create a separation distance of several wavelengths for RF charging and communication. Networked master chargers (both RF and induction) are in some embodiments built-in to conference room tables, office tables or lightweight pads so that meeting participants are able to wirelessly charge their devices, connect to each other or to the Intranet/Internet, transmit/receive information, and make payment transactions. Multi-coil induction masters, tables or pads in some embodiments have a credit card reader. Similarly, RF masters in some embodiments include credit card readers, so users can "sweep" their card for magnetic cards or they can

read NFC-enabled cards with NFC. Therefore, users of slaves are not only able to charge their devices but also make payment transactions. For instance, phones with near field communication (NFC) capabilities in some embodiments are charged and are also used for contactless payment so that the user places the phone near those coils (or RF beams of a master in the case of RF-based master) in order to transmit payment information to a secured server on the Internet. Alternatively, credit cards in some embodiments have a chip so that they transmit their information to the master device.

Some of the coils of a multi-coil master (or RF beams of a master in the case of a multi-antenna RF-based master) in some embodiments are dedicated and optimized for communication, while others are optimized for charging. The master has different means for power, e.g., one or more of AC and adaptor, battery, induction, etc.

In some embodiments, a master uses an external induction charger to get charged, and then uses a high frequency directional and focused RF beam to power up a slave device and communicate with it. A master uses induction in some embodiments to charge a slave and uses a communication transceiver (e.g. a high frequency directional and focused RF beam) to communicate with the slave. Two or more slaves are charged by a master induction charger in some embodiments and then communicate with each other directly or through the master, possibly under the control of a remote network server.

In some embodiments an element is designed for the master, slave or both so that at low frequencies the element is like a coil inductor and at high frequencies the element is like an antenna. This means that at the same time both RF power and induction power are available. If the distance is short then waves cannot be created and it will be more like induction. So distance is used to select one mode or the mode is chosen automatically. In other embodiments, the master, slave or both to have two different elements for different distances (one for short distances and one for far distances). In some of these embodiments, the master does time multiplexing between the two or select one over the other. In some embodiments, an element is designed to be a coil at low frequencies and a multiple antenna at high frequencies with beam forming capabilities. The length of the coil is much bigger than the size of antenna required for RF at high frequencies. In some embodiments, this coil is divided into multiple RF antennas and the resulting multiple antennas is used to do beam forming.

BRIEF DESCRIPTION OF THE DRAWINGS

The novel features of the invention are set forth in the appended claims. However, for purpose of explanation, several embodiments of the invention are set forth in the following figures.

FIG. **1** conceptually illustrates an overview of the networked aspect of some embodiments of the invention.

FIG. **2** conceptually illustrates an overview of the system of some embodiments of the invention where the slave does not have a battery.

FIG. **3** conceptually illustrates an alternative system of some embodiments of the invention where the slave has a battery.

FIG. **4** illustrates a more detailed diagram of the embodiments shown in FIGS. **2** and **3**.

FIG. **5** conceptually illustrates a process for master-slave charging and communication in some embodiments of the invention.

FIG. **6** conceptually illustrates a master two different transmitters for power generation and communication in some embodiments of the invention.

FIG. **7** conceptually illustrates a master and a slave that each include two separate antennas/transceivers, one for power generation and one for communication in some embodiments of the invention.

FIG. **8** conceptually illustrates a master in some embodiments of the invention that uses beam steering to change the direction of the beam when the slave is not directly in front of its beam.

FIG. **9** conceptually illustrates a multi-antenna RF master that has a non-conductive spacer material in front of its antenna in some embodiments of the invention.

FIG. **10** conceptually illustrates a master that uses induction to charge and communicate with a slave in some embodiments of the invention.

FIG. **11** conceptually illustrates a master in some embodiments of the invention that uses the power transmitter for charging, and a separate transmitter for data transmission.

FIG. **12** conceptually illustrates a master that has a power transmitter for each of its coils in some embodiments of the invention.

FIG. **13** conceptually illustrates a master in some embodiments of the invention with coils that have the same frequency and a multiplexer to activate coils at different times.

FIG. **14** conceptually illustrates induction between the master and the slave by using more than one coil on the master or the slave in some embodiments of the invention.

FIG. **15** conceptually illustrates a process of some embodiments of the invention to change a master device's coil pattern in some embodiments of the invention.

FIG. **16** conceptually illustrates a multi-coil slave with induction charging in some embodiments of the invention.

FIG. **17** conceptually illustrates a process for reconfiguring coils of a slave device in some embodiments of the invention.

FIG. **18** conceptually illustrates a process for terminating power generation in the slave in some embodiments of the invention.

FIG. **19** conceptually illustrates a process for configuring the slave's coils for either power generation or data transmission in some embodiments of the invention.

FIG. **20** conceptually illustrates a hybrid system of some embodiments of the invention where the master uses an induction charger as a power source to power itself and then uses a high frequency directional and focused RF beam to power up one or more slave devices and communicate with them.

FIG. **21** conceptually illustrates a master in some embodiments of the invention that acts as an induction charger and uses induction to charge the slave before using its high frequency directional beam to communicate with the slave.

FIG. **22** conceptually illustrates two slaves in some embodiments of the invention that use the power of a master's coils to power up or charge their batteries and then communicate with each other using their communication transceivers.

FIG. **23** conceptually illustrates an element in some embodiments of the invention that is designed to be a coil at low frequencies and a multiple antenna at high frequencies with beam forming capabilities.

FIG. **24** conceptually illustrates a computer system with which some embodiments of the invention are implemented.

DETAILED DESCRIPTION

In the following detailed description of the invention, numerous details, examples, and embodiments of the inven-

tion are set forth and described. However, it will be clear and apparent to one skilled in the art that the invention is not limited to the embodiments set forth and that the invention may be practiced without some of the specific details and examples discussed.

Some embodiments provide a wireless transmitter that uses radio frequencies (RF) with small high gain directive antennas and high frequency radio waves or electromagnetic induction to charge one or more receiving devices and then communicate with them. Wireless communication is convenient because it allows devices to connect to each other without wires. Wireless power is convenient because it removes the need for wires and connectors. This invention combines these two aspects together.

Some embodiments use radio frequency (RF) instead of resonant electromagnetic induction to charge and communicate with slave devices. Throughout this specification the 60 GHz spectrum is used for describing the RF charging aspect of this invention. However, 60 GHz is only one special case of using higher frequencies for implementing this invention. In the U.S. the 60 GHz spectrum band can be used for unlicensed short range data links (1.7 km) with data throughputs up to 2.5 Gbits/s. Higher frequencies such as the 60 GHz spectrum experience strong free space attenuation. The smaller wavelength of such high frequencies also enables the use of small high gain antennas with small beam widths. The combination of high attenuation and high directive antenna beams provides better frequency reuse so that the spectrum can be used more efficiently for point-to-multipoint communications. For example, a larger number of directive antennas and users can be present in a given area without interfering with one another, compared to less directive antennas at lower frequencies. Small beam width directive antennas also confine the electromagnetic waves to a smaller space and therefore limit human exposure. The higher frequencies also provide more bandwidth and allow more information to be wirelessly transmitted. Thus, the same antenna can be used to for power generation and communication.

There are several standards bodies that are using high frequencies such as 60 GHz. These include WirelessHD, WiGig, and WiFi IEEE 802.11ad. The WirelessHD specification is based on the 7 GHz of continuous bandwidth around the 60 GHz radio frequency and allows for digital transmission of uncompressed high definition (HD) video, audio and data. It is aimed at consumer electronics applications and provides a digital wireless interface for file transfers, wireless display and docking, and lossless HD media streaming for ranges up to 10 meters. Theoretically it can support data rates as high as 25 Gbit/s. The 60 GHz band usually requires line of sight between transmitter and receiver because of high absorption. The WirelessHD specification gets around this limitation by using beam forming at the transmitter and receiver antennas to increase effective power of the signal.

The WiGig standard (short for the "Wireless Gigabit Alliance") is also promoting high speed wireless communication over the unlicensed 60 GHz spectrum and is a competing standard to WirelessHD. The WiGig standard is also taking advantage of the high absorption of 60 GHz that limits signal propagation and reduces interference with other wireless systems.

IEEE 802.11ad is also under development by the IEEE task group for the upcoming 600 Hz standard. This is essentially a faster version of the IEEE 802.11 standard that uses the 60 GHz band. However, because it uses a new spectrum it will not be backward compatible with existing WiFi.

Wireless USB is a standard which does not use 60 GHz. Wireless USB uses the Ultra-wideBand (UWB) radio platform that operates in the 3.1 to 10.6 GHz frequency and can transmit 480 Mbit/s at distances up to 3 meters and 110 Mbit/s at up to 10 meters. While the goal of 802.11 family (802.11*) WiFi is to replace Ethernet cables and provide wireless Internet access, the goal of Wireless USB is to remove the cables from USB based PC peripherals. Wireless USB can be used for printers, scanners, digital cameras, MP3 players, game controllers, hard disks, and flash drives. Both WirelessHD and WiGig are competing in some aspects with the Wireless USB standard. Inductive Charging in some embodiments is performed at lower frequencies such as frequencies of less than 100 MHz, whereas RF frequencies used in some embodiments is greater than 900 MHz or 1 GHz. The higher the RF frequencies, the smaller the wavelength and hence the smaller the size of the antenna.

None of the above standards address charging slave devices before communicating with them. Instead they assume that the slaves have access to some power source such as AC power or a battery. In some embodiments a master device uses one or more directional antennas or uses antenna array beam forming to transmit high frequency RF signals to one or more slave devices to power them up or charge their batteries. By using the directional antennas or using antenna array beam forming, these embodiments concentrate the power on a smaller area.

Some embodiments provide a networked system with a master device that can power-up or charge a plurality of slave devices and communicate with them. In some embodiments the master is connected to other network devices and/or Intranet/Internet though packet-based or non packet based networks and wired or wireless networks (such as Bluetooth®, Wireless Local Area Network (WLAN), fourth generation (4G) cellular, Code Division Multiple Access (CDMA), Time Division Multiple Access (TDMA), Worldwide Interoperability for Microwave Access (WiMAX), UWB and 60 GHz). The master in some embodiments monitors the power status of a plurality of slaves, decides which subset of those slaves get charged and what their charging priorities are. The slaves in some embodiments have different power status and capabilities (some have power to communicate, while others have low battery, and yet others have no battery).

In some embodiments, the slave has sensors (e.g. temperature, gyrator, pressure, and heart monitor) with electronic circuitry that are powered up by the master, perform their sensing functions and communicate their data to the master, a network server, or some other device. The channel for power transfer in some embodiments is RF or electromagnetic induction. A control channel is used in some embodiments by the master to send commands to the slaves, Some embodiments use the same channel for power, control, and communication. One, two or all of the power, control, and communication in some embodiments use different channels (e.g. different frequencies, different radios, different antenna, and different coils for induction) or different methods (RF Beam and induction).

In some embodiments, the master configures the system to increase power and communication efficiency (e.g. uses several antenna and beam steering for RF, or several coils and coil pattern optimization for induction). In some embodiments the master and the slave have a matrix of coils (for induction) and the master changes it's transmit coil

pattern in order to optimize power transfer to the slave. Several masters in some embodiments cooperate or are configured by a network server or remote user to use beam steering and different antennas to charge a plurality of slaves. In some embodiments the slaves provide their identifying information and register themselves in a slave information database. In some embodiments the masters provide their identifying information and register themselves in a master information database. The master in some embodiments receives a slave's identifying information (MAC ID, network Internet protocol (IP) address, name, serial number, product name and manufacturer, capabilities, etc.) by communicating with the slave or by examining the slave information database to select which slaves to power up, charge, or communicate with. A slave in some embodiments prevents non-authorized masters (or networked servers) from trying to charge it or power it up by checking the master's identifying information with the authorized master's list stored on the slave. The master's selection and power scheduling of slaves is dependent on the priorities of slaves' functions and data in some embodiments.

In some embodiments, the master uses frequency hopping and time hopping to select some slaves from a plurality of slaves. A master in some embodiments charges a slave to a pre-set high level, then communicates with it until battery falls to a pre-set low level, and then charges slave again, etc. A master in some embodiments powers-up/charges a slave's battery and communicate with the slave at the same time. In some embodiments a slave that is powered up gets connected to a network (packet-based or non packet based, wired or wireless such as Bluetooth®, WLAN, 4G cellular, CDMA, TDMA, WiMax, UWB and 60 GHz) through the master, through other nearby slaves, or directly to an access point/tower.

A master that does not have a network connection in some embodiments charges a slave and uses the slave's network connection to connect to the network and perform networked operations such as downloading software and driver upgrades. In some embodiments a slave that is powered up and charged becomes a master charger for other slaves.

The master and the slave optionally have a touch screen and/or keyboard for entering data which can be displayed on the screen and/or communicated, respectively, to the slave and the master in some embodiments. A network server that is connected to the master is effectively the real master in some embodiments and instructs the master, monitors the power status of a plurality of slaves, decides which subset of those slaves are powered up/charged/communicate with, and what their priorities are. Also, an authorized remote user in some embodiments uses the network to connect to the network server and control the network server, which in turn instructs the masters to monitor the power status of a plurality of slaves, decide which subset of those slaves are powered up/charged/communicate with, and what their priorities are.

A non-conductive spacer is used in some embodiments to create a separation distance of several wavelengths for RF charging and communication. Networked master chargers (both RE and induction) are in some embodiments built-in to conference room tables, office tables or lightweight pads so that meeting participants are able to wirelessly charge their devices, connect to each other or to the Intranet/Internet, transmit/receive information, and make payment transactions. Multi-coil induction masters, tables or pads in some embodiments have a credit card reader. Similarly, RF masters in some embodiments include credit card readers, so users can "sweep" their card for magnetic cards or they can read NFC-enabled cards with NFC. Therefore, users of slaves are not only able to charge their devices but also make payment transactions. For instance, phones with near field communication (NEC) capabilities in some embodiments are charged and are also used for contactless payment so that the user places the phone near those coils (or RF beams of a master in the case of RF-based master) in order to transmit payment information to a secured server on the Internet. Alternatively, credit cards in some embodiments have a chip so that they transmit their information to the master device.

Some of the coils of a multi-coil master (or RF beams of a master in the case of a multi-antenna RF-based master) in some embodiments are dedicated and optimized for communication, while others are optimized for charging. The master has different means for power, e.g., one or more of AC and adaptor, battery, induction, etc.

In some embodiments, a master uses an external induction charger to get charged, and then uses a high frequency directional and focused RF beam to power up a slave device and communicate with it. A master uses induction in some embodiments to charge a slave and uses a communication transceiver (e.g. a high frequency directional and focused RF beam) to communicate with the slave. Two or more slaves are charged by a master induction charger in some embodiments and then communicate with each other directly or through the master, possibly under the control of a remote network server.

In some embodiments an element is designed for the master, slave or both so that at low frequencies the element is like a coil inductor and at high frequencies the element is like an antenna. This means that at the same time both RF power and induction power are available. If the distance is short then waves cannot be created and it will be more like induction. So distance is used to select one mode or the mode is chosen automatically. In other embodiments, the master, slave or both to have two different elements for different distances (one for short distances and one for far distances). In some of these embodiments, the master does time multiplexing between the two or select one over the other. In some embodiments, an element is designed to be a coil at low frequencies and a multiple antenna at high frequencies with beam forming capabilities. The length of the coil is much bigger than the size of antenna required for RF at high frequencies. In some embodiments, this coil is divided into multiple RF antennas and the resulting multiple antennas is used to do beam forming.

Some embodiments provide a system for charging devices. The system includes a master device and a slave device. Some embodiments provide a method for charging devices in a system that includes a slave device and a master device. The slave device includes (1) an antenna to receive a radio frequency (RF) beam and (2) a power generation module connected to the antenna that converts RF energy received by the slave antenna to power. The master device includes (1) a directional antenna to direct RF power to the antenna of the slave device and (2) a module that provides power to the directional antenna of the master device.

Some embodiments provide a system for charging devices. The system includes a master device and a slave device. Some embodiments provide a method for charging devices in a system that includes a slave device and a master device. The master device includes a first group of coils to transmit energy by induction. The first group of coils is arranged in a first pattern. The master device also includes a module that provides alternating power to the first group of coils. The master device also includes a processing module. The slave device includes a second group of coils

to receive energy by induction from one or more coils of the master device. The second plurality of coils is arranged in a second pattern. The slave also includes a power generation module connected to the second group of coils that converts the received induction energy to power. The master processing unit (i) receives information from the slave regarding the slave coil pattern and (ii) based on the received information, activates a set of coils in the first group of coils to optimize an amount of induction energy received by the second group of coils.

In some embodiments, the processing module (i) receives information regarding the amount of induction energy received by the second group of coils and (ii) when the induction energy received by the second group of coils does not satisfy a threshold, activates a different set of coils in the first group of coils to further optimize an amount of induction energy received by the second group of coils.

Some embodiments provide a system for charging devices. The system includes a master device and a slave device. Some embodiments provide a method for charging devices in a system that includes a slave device and a master device. The master device includes a first group of coils to transmit energy by induction. The master device also includes a module that provides alternating power to the first group of coils. The slave device includes a second group of coils to receive energy by induction from one or more coils of the master device. The second group of coils has a set of operating parameters. The slave also includes a power generation module connected to the second group of coils that converts the received induction energy to power. The slave also includes a processing module. The slave processing unit (i) receives a set of master device's parameters and (ii) based on the received master device's parameters, reconfigures one or more of the operating parameters of the second group of coils to maximize the received induction power.

In some embodiments, the master device's parameters include an operating frequency of the master's induction frequency, data and modulation method used by the master, and an identifying information of the master. In some embodiments, the operating parameters of the slave device are reconfigured by tuning of one or more coils in the second plurality of coils. In some embodiments, the operating parameters of the slave device are reconfigured by calibrating of one or more coils in the second group of coils. In some embodiments the operating parameters of the slave device are reconfigured by impedance matching of one or more coils in the second group of coils.

Several more detailed embodiments of the invention are described in sections below. Section I provides an overview of several embodiments of the invention. Section II describes different embodiments of the invention that provide charging remote device using RF beams. Next, Section III describes several embodiments that charge remoter devices using induction. Section IV discusses hybrid embodiments that charge remote devices using both RF beams and induction. Finally, section V provides a description of a computer system with which some embodiments of the invention are implemented.

I. Overview

A. Charging and Communicating with One or More Slaves

FIG. **1** conceptually illustrates an overview of the networked aspect of some embodiments of the invention. Masters in some embodiments charge and communicate with one or more of the slave devices within their vicinity. The master in some embodiments is connected to other network devices. In the example of FIG. **1**, master A **105** is connected using a wireless channel (packet-based system or non-packet based system, Bluetooth®, WLAN, 4G cellular, CDMA, TDMA, WiMax, UWB and 60 GHz, etc.) through an access point **155** to a network **110** and powers up slaves **1** and **2**. Master B **115** has multiple antennas **117**, is connected to a network **110** using a wireline, and powers up slaves **3**, **4** and **5**. Master C **120** is also connected to a network **110** using a wireline. Master B **115** and master C **120** cooperate (or are controlled by a controller device such as network server **135** or remote user **140**) and use beam steering to charge slave **6**. The slaves differ in their power status and capability in some embodiments. Some slaves have power and communicate, while others have low battery, and yet others have no battery. The charging of the slaves is done wirelessly with methods such as a resonant electromagnetic induction channel or an RF channel.

B. Power Transfer to Authorized Slaves

Charging in some embodiments is initiated by the slave or by the master when the two are close to each other (for example either automatically or by pressing a button on the slave or the master, respectively). A master selects which slaves to power up and communicate with in some embodiments. The slaves have identifying information about themselves stored in their memories. This stored information includes one or more of the slaves' media access control address (MAC address or MAC ID), network IP address, name, serial number, product name and manufacturer, capabilities, etc. The master (or a controller device such as a network server, or a remote user) requests that information. In some embodiments, the slaves are proactive and communicate with the master (or a controller device such as a network server, or a remote user) if they have power (e.g. charge my battery, I want to send you some data, etc.) and provide their identifying information and register themselves in a slave information database. In some embodiments, the master has access to a stave information database that includes an authorized list. This database is locally stored **125** on the master **115** or it is stored on a possibly larger networked database **130**.

In some embodiments, a master that employs a focused directional RF beam uses beam steering to focus the beam on a particular slave, power the slave up slightly to get slave's identifying information, and only continue powering up/charging and communication if the slave's identifying information match with an entry on the authorized list. For instance, only a slave with a certain MAC ID, network IP address, name, serial number, product name, manufacturer, capabilities, etc. may be powered up, charged or communicated with. For RF-based methods frequency hopping methods are also used in some embodiments by the master and authorized slaves to allow them to get power while unauthorized nearby slaves (that do not know the hopping sequence) do not receive much power. Similarly, a master that employs focused RF beams uses time hopping to power up slaves.

A master that uses resonant induction uses the right resonant frequency that matches the slave, coil matrix frequency hopping, coil matrix time hopping, and current/voltage to power up a nearby authorized slave in some embodiments. The slave's identifying information is communicated by the slave to the master in some embodiments if the slave has some power (communicated using RF communication, backscattering, infrared or other methods), or communicated after an initial sub-optimal power-up. Again, the master only transfers power to the slave if the slave's identifying information match with an entry on an

authorized list. In some embodiments, the slave's resonant frequency is stored at the master (e.g., in slave information database **125**) or at a network database (e.g., in slave information database **130**).

C. Power Transfer only from Authorized Masters

A slave prevents non-authorized masters from trying to charge it or power it up (or networked servers from commanding masters to charge it or power it up) in some embodiments. Slaves store identifying information about masters (or networked servers) that are authorized to charge them. The stored information about authorized masters or networked servers includes one or more of the following information about the masters: the masters' media access control address (MAC ID), network IP address, name, serial number, product name and manufacturer, capabilities, etc. The slave requests identifying information from the master or the network server. The master (or the network server) in some embodiments is also proactive and sends its identifying information to the slave. The masters in some embodiments also register themselves and their identifying information in a master information database **150**. The slave in some embodiments checks the master's information with the authorized list and if there is not a match the slave disables charging and/or power-up.

D. Master's Scheduling of Slaves

The selection and power scheduling of slaves in some embodiments are dependent on the priorities of slaves' functions or data (e.g. slave **1** with a higher priority gets 5 minutes scheduled for charging and slave **2** with a tower priority gets 3 minutes). A slave information database **125** stored at the master **115** or a slave information database **130** stored on the network include priorities for slaves and their data in some embodiments. The slaves also communicate their data (and possibly the priority of their data) to the master in some embodiments. Based on this information the master then decides on a course of action.

E. Charging and Communication Strategies

The power status of slaves and their power-related requests and the master's response strategy vary significantly in different embodiments. The followings are several examples: (1) slave has battery and power and is ready to communicate. Master may communicate; (2) slave has battery and some charge, and slave requests to communicate. Master may allow communication or overrule and charge the slave further first (e.g. if after communicating the quality of slave data is not high because of the low power status of slave); (3) slave has battery and some charge, but slave requests to be fully charged. Master may honor the request and charge the slave or may overrule and communicate with the slave (e.g. if live communication has higher priority); (4) slave has battery but battery has no charge. Master may charge the battery first or just power up the stave and communicate first if communication priority is high; (5) for options 1, 2, 3, and 4 above if after communicating a slave's battery charge level reaches zero or some pre-determined tow level then the battery is charged to some higher pre-determined level before resuming communication; (6) for options 1, 2, 3, and 4 above if there is sufficient power transferred from the master to the slave then the shave may communicate at the same time that the master is charging the battery; (7) slave has battery and after it is charged by the master to a sufficient level the slave connects and communicates with nodes in another network (e.g. slaves **1** and **3** connect to Bluetooth®, WLAN, 4G cellular, WiMax, UWB, 60 GHz and mesh ad-hoc networks). The master optionally continues to charge the slave or charge the slave once the slave's battery levels reach pre-set low levels; (8) slave has no battery and needs to be powered up before communication. Master powers up the slave before communicating (e.g. slave **2** in FIG. **1**).

F. Charging Channel, Communication Channel and Control Channel

In some embodiments the same channel is used for both charging the slave and communication, while in other embodiments different channels are used for charging and communication (e.g. two RF channels possibly with different frequencies—one for charging and one for communication, or charging with resonant induction and communication with RF). In some embodiments, the master also uses a control channel to inform the slaves what it wants to do. Thus, all the commands could come over the control channel, although it is also possible to send commands over the data communication channel as well. The control channel does not need to have high bandwidth. Thus, while the communication channel and the control channel use the same frequency in some embodiments, the control channel uses a lower frequency lower bandwidth channel than the communication channel. The master may also use an induction charger or RF charger to charge its own battery if its power source is a rechargeable battery instead of AC power.

G. Connecting to New Networks for Slaves and/or Master

When the master is connected to a network (packet-based or non packet-based, Bluetooth®, WLAN, 4G cellular, TDMA, CDMA, WiMax, UWB, 60 GHz, etc., or wired connection) then a powered up or charged slave is also connected to the same network through the master (e.g. slave **4** in FIG. **1**). Likewise, when a slave is connected to a network (Bluetooth®, WLAN, 4G cellular, WiMax, UWB, 60 GHz, etc., or wired connection) then the master gets connected to that network after the master charges that slave (e.g. slave **3** and Master B **115** in FIG. **1**). Thus, after powering up slave **3** not only is slave **3** able to connect to its wireless network (Bluetooth®, WLAN, 4G cellular, WiMax, UWB, 60 GHz, etc.) but master B **115** is also able to connect to those networks through slave **3** acting as a network node. If a master does not have a network connection and a slave does the master in some embodiments charges the slave and use its network connection to connect to the network and perform networked operations such as downloading software and driver upgrades.

H. Slave Mesh Networks

A slave that gets powered up acts as a network node and communicate with other slaves in some embodiments. For instance, in FIG. **1** slave **1** is initially powered up by master A **105**. Master A **105** cannot communicate with slave **7** because slave **7** is not within its communication range. However, master A **105** can communicate with slave **1**, and slave **1** can in turn communicate with slave **7**. Likewise, slave **7** can communicate with slave **8**, etc. Thus, by charging slave **1** the master has connected itself to a mesh network of slaves and other networks that it was not connected to before.

I. Slave Becoming Chargers

Slaves that get charged act as masters and charge other slaves in some embodiments. In FIG. **1** slave **5** is charged by master B **115**. Slave **9** also needs to be charged. In this example, slave **5** charges slave **9**. This may for example be because slave **9** is too far from master B for charging.

J. Network Server or Remote User Controls the Master

The explanations above assume that masters A and B control the decision making in FIG. **1**. It is also possible that a network server is in command and is the "real" master. For example, the network server **135** instructs master B **115** to power up the slaves in its vicinity and requests information

from the slaves. Master B **115** then sends the slaves' identifying information and any matching entries it has in its own database **125** (together with any slave requests) to the network server **135**, the network server further searches the networked slave information database **130** for additional identifying and matching information, and then instructs the master on a course of action (e.g. charge slaves **1** and **3**, but no further action with unauthorized slave **4**). In some embodiments, an authorized remote user **140** uses the network **110** to connect to the network server **135** and control the network server, which in turn controls the masters as just described. Thus, depending on which component is in control (remote user, network server, or a master) that component monitors the power status of a plurality of slaves, decides which subset of those slaves get charged and what their charging priorities are.

II. Charging with RF

In some embodiments, the master uses a narrow focused RF beam for charging. Converting RF signals to DC power has been done in Radio-Frequency Identification (RFID) far field applications. In near field RFID applications, where the distance between the RFID reader and the tag is less than the wavelength of the signal, mutual inductance is used for communication. However, in far fields RFID applications, where the separation distance between the RFID reader and the tag is much greater than the wavelength of the signal, backscattering is used for communication. With backscattering a tag first modulates the received signal and then reflects it back to the reader. There are several important differences between the disclosed embodiments of the current invention and those of far field RFID which are described through this specification. For instance, RFID does not use directional beams and hence spreads the power of the transmission over a wider space and unnecessarily exposes humans to electromagnetic radiation. RFID tags also require little power to operate (e.g. the receive power is of the order of 200 microwatts) compared to the slave devices that the disclosed embodiments of the current invention powers-up and communicates with. For instance, the receive power for the slaves in some embodiments of the invention is of the order of milliwatts and higher. The upper receive power range depends on the transmit drivers and the size of the coils or antennas, and in some embodiments goes above the Watt range. RFID operates in lower frequencies (e.g. less than 960 MHz) and hence provides smaller communication bandwidths and requires much bigger antennas compared to the higher frequencies used in different embodiments of the current invention. Also, RFID uses backscattering for communication which is a low data rate method because the antenna is turned on and off by the data like an on-off modulation switch. The embodiments of the current invention provide a much higher data rate because standard wireless transceiver modulation methods are used (e.g. modulations for cellular, 802.11*, Bluetooth®) and then the data is sent to the antenna.

In contrast to RFID, some embodiments of the current invention use narrow directional focused beams in order to simulate a wire connection for charging and communication. This focusing of the beam provides more power and energy for charging slave devices. A directional antenna is an antenna which radiates the power in a narrow beam along a certain angle and directed to a certain area or receive antenna. Some embodiments of the invention use directional antennas that provide a large gain in theft favored direction. Some embodiments use a group of antennae (an antenna array) arranged to provide a large gain in a favored direction.

FIG. **2** conceptually illustrates an overview of a system **200** of some embodiments of the invention where the slave does not have a battery. The master **205** is the bigger system component with a good power source **215** (e.g. AC or a good battery life), whereas the slaves **210** (only one is shown for simplicity) have limited sources of power (e.g. limited battery or no battery). Example master devices are a car, PC, laptop, cell phone, digital/video camera, or multimedia device such as an IPod. The slave device could be any non-battery device (e.g. memory stick or memory device) or DC or battery operated device. Some examples of the latter are laptop, cell phone, PDA, wireless headsets, wireless mouse, wireless keyboard, pager, digital/video camera, external hard drive, toy, electronic book readers, sensor, CD/DVD/cassette/MP-3 player, toothbrush, lighting devices, electronic appliances, or a car (e.g., an electric car). Even AC powered devices in some embodiments use this system as a backup power system in case AC power goes off. Thus, a battery operated master could power up an AC powered device that temporarily has lost its AC power source.

In some embodiments, the master is just a dedicated charging device and does not communicate with the slaves other than for charging. The master has a power source **215** such as AC or battery. The power source powers the master's RF transceiver **220**, processing module **225** and network card **230** which are all connected to a bus **235**. Although the term transceiver (which implies a module with shared circuitry for a transmitter and receiver) is used in FIG. **2** and some of the following figures, the invention is not restricted to transceivers. Some embodiments use transmitter-receiver modules (which has transmitter and receiver in the same housing without common circuitry) while other embodiments use separate transmitter and receiver modules. The master may be connected to a network **240** such as the Internet through its network card **230** or through a wireless connection. The master has a high gain antenna **245**. The master's RF transceiver **220** uses the antenna **245** to shoot its focused beam to the slave to power up the slave. This power up RF wave is not modulated since it is used for power generation and not data transmission. The antenna in some embodiments is comprised of sub-elements such that through different phases and amplitudes the master uses beam steering to change the angle of the beam as described by reference to FIGS. **4** and **8** below. The battery-less slave **210** of FIG. **2** also has a directional antenna **250** that is connected to a power generator component **255**. The power generator provides power from the received radio frequency signals. The energy from the master's RF transmission is converted by this component to a supply voltage (not shown) and is stored in a capacitor (not shown). This supply voltage is then provided to the slave's transceiver **260** and processing module **265** to power them up. The slave may optionally have a network card (not shown) which is also powered up with this supply voltage. The slave uses the network card or its RF transceiver to connect to a network. Once the slave is powered up it is ready to communicate with the master. The master then sends commands (e.g. read from slave's memory, write to slave's memory) to the slave in some embodiments. The slave sends receive acknowledgments to the master and responds to commands. For example, in response to a read command the slave returns data (text, images, audio, and video). The slave also sends status information to the master such as "I am this device", "I have data", "I need to be charged", "My battery level is 50%", etc in some embodiments. The range of this system is not limited by the radio since the radio requires lower

sensitivity and can handle low input signals. The terms RF-based based master or RF beam master are interchangeably used in this specification to refer to a master that uses an RF beam to charge the slaves.

The power generator in FIG. **2** is used to generate a voltage supply and store it in a capacitor. FIG. **3** conceptually illustrates an alternative system **300** of some embodiments of the invention where the slave has a battery. The master components are similar to the components shown in FIG. **2**. In these embodiments, the slave battery **315** is charged by a high frequency directional RF beam from a master device **305**. The battery is then used for powering the slave **310** for communication. In FIG. **3** slave **310** uses a low frequency low bandwidth control channel **320** to adjust the position of a switch **325**. In FIG. **3** slave **310** includes a control module **320** that uses a low frequency low bandwidth control channel to adjust the position of a switch **325** and set whether to use the energy captured by the power generator **330** to power up the device, charge the battery **315**, or both. The control channel **320** could use a simple modulation method such as amplitude modulation (AM), frequency modulation (FM), phase, and quadrature amplitude modulation (QAM), rather than complex wireless modulation techniques (e.g. Orthogonal frequency-division multiplexing (OFDM)). These simple modulation schemes require less complex hardware and processing and are optimal for low-speed data. Either the slave, or the master, or both in combination can decide whether the slave should communicate at first or not. For example, the slave looks at its battery, decides how much life it has, and then determines whether to charge, communicate, or do both in some embodiments. Feedback mechanisms could be used to dynamically improve the system. For instance, if the slave sends data to the master and the master determines that the data from the slave is bad quality then the master in some embodiments uses the control channel to tell the slave to not use any of the received energy for charging and instead use all of it for live communication only. There are several possible strategies for slave power status and master charging, eight of which were listed in the previous section titled "Charging and Communication Strategies".

FIG. **4** illustrates a more detailed diagram of the embodiments shown in FIGS. **2** and **3**. The master **405** has a power source **410** such as AC power (which is rectified and regulated with an adaptor), battery, or some other power generating device (e.g. induction from another source as described below by reference to FIG. **20**). The master's RF transceiver radio has a transmitter (Tx) **415**, a receiver (Rx) **420**, and a digital baseband processing unit **425**. The transmitter includes a Digital to Analog Converter (DAC) (not shown). RF transmissions for power are not modulated, whereas data transmissions use modulation and optionally coding. The receiver includes an Analog to Digital Converter (ADC) (not shown). The digital baseband unit **425** communicates with a processing module **430** that includes a digital signal processing unit **435**, a processor **440** and memory **445**. The transceiver's transmitter and receiver use a duplexer **455** that allows bi-directional communication over a single channel and antenna. Some embodiments include an optional attenuator **450** which is placed in front of the receiver. This protects the receiver from being overloaded by the transmitter or by other large incoming signals. The attenuator also allows the receiver to receive when the transmitter transmits. The attenuator attenuates the entire signal and is like an all-pass filter. Alternatively, instead of the attenuator some embodiments include frequency-selective filter to protect the radio. FIG. **4** shows a general case where the antenna has sub-elements **442** that enable steeling of the beam. Each antenna sub-element is effectively a separate antenna and throughout this specification the term antenna and antenna sub-element will be used interchangeably. In FIG. **4** a beam-forming unit (or beam former) **453** is placed before the duplexer **455**. In other embodiments the beam-forming unit is placed after the duplexer. The beam former takes the output of the transmitter (Tx) and generates different phase and amplitudes for each of the antenna sub-elements in order to steer the beam. Likewise, on the receive side the beam-former takes multiple receive signals from each antenna sub-element and combines them with multiple phases/amplitudes and provides the output to the receiver (Rx). In yet other embodiments there is not an explicit beam-forming component and the beam-forming function is integrated into the transmitter (Tx) and receiver (Rx) where they generate the phase and amplitudes for beam-forming. The master's beam former is used to focus the transmit power on the slave's antenna for optimum power transfer, while the slave's beam former is used mostly for communication.

In some embodiments, the master and slave use a frequency hopping mechanism in order to avoid unauthorized slave devices from using the master as a charger. For example, a particular company that produces slave devices (cell phones, IPod, laptops, etc) and chargers for them could include a frequency hopping mechanism that both the slave and the master devices from that company would know about. For instance, a master detects and charges a slave using frequency f**1** and after an elapsed time T**1** the master's frequency is changed to f**2** and the slave would also know that it has to change to that frequency. After a further elapsed time of T**2** the master's frequency is changed to f**3** and the slave changes too, etc. An unauthorized slave would not know how to change its frequency with time and as a result of the mismatch between its frequency and that of the master then it will not receive a lot of power from the master. In FIG. **4**, the baseband of the transmitter has a frequency hopping unit **460** that generates the clock **463** frequency for the transmitter and receiver. In some embodiments, the transmitter and receiver have the same frequencies while in other embodiments they have different frequencies. In some embodiments the master would have an interface where the user programs the frequency hopping algorithm and downloads it to certain slaves such that the master could only charge and communicate with slave devices that the user chooses. In some embodiments, the master performs time hopping. With time hopping the master transmits at different times based on a known sequence between the master and the slaves. The slaves look at incoming energy at those known specific time intervals. In some embodiment, during each time hop the frequency also changes in order to separate the slaves further.

The slave **470** in FIG. **4** has components similar to the master **405**, the main difference is the power generation component **473** which will be discussed in more detail below. The antenna elements **499** of the slave receive the RF waves from the master. The energy from the master's non-modulated RF transmission is converted by the slave's power generator to a supply voltage, Vdd, and is stored in capacitor C **475**. This supply voltage is then fed to a voltage converter **477** whose output provides different voltage levels as required by the different slave modules. The outputs from the voltage converter are then provided to the slave's transceiver **480** and processing modules **483** (and networking module if it has one) and power them up. It is also possible that different modules have different Vdd values. If

the slave is a sensor the processing module may also optionally have a sensor and associated circuitry. Again, an optional attenuator **485** may be placed in front of the slave's receiver to protect it from being overloaded by the transmitter or by other large incoming signals. The attenuator also allows the receiver to receive when the transmitter transmits. A frequency-selective filter **487** is also used in some embodiments to protect the radio. For instance, when two different frequencies are used for power generation and communication, the filter may be chosen such that it rejects the power frequency but allows the communications frequency. Like the master, the slave also has beam forming **488** for steering its beam, and frequency hopping **481** for limiting power transfer to authorized slaves.

The calibration block **490** calibrates and tunes each antenna to maximize power. It matches the impedance of each antenna with its rectifier. The configuration block **492** controls the calibration block. Since these blocks also need power, some embodiments initially power up a small portion of the circuits. For instance, one or more of the antenna sub-elements receive the RF power. The signal is then rectified (by the rectifier **493**), the power absorbed, and converted to a supply voltage, Vdd, for a small power absorber, and stored it in a small capacitor **494**. This supply voltage is then provided to the slave's configuration **492** and calibration blocks **490**. The calibration block calibrates the matching of each antenna or frequency times to the master's frequency each of the antennas in some embodiments. The power generator has a rectifier **495** for each of the antenna sub-element **499** signals. A summer **471** then sums the output of all rectifiers **495**. The configuration block monitors each antenna signal (before the power generator's rectifiers as shown in FIG. **4**, although it could also monitor after the rectifiers). The configuration block then controls the calibration block to change the antenna tuning in order to maximize the signals. Once the power generator's Vdd reaches a pre-set level the configuration block uses a switch **496** to provide the power to the rest of the system, such as the processing module **483**, the RF transceiver **480**, and any other modules (e.g. network card module if there is one in the slave). If the slave has a battery **497** the switch is also used in some embodiments to enable battery charging only, or enable battery charging and power-up together so that the slave is able to communicate while the battery is charging. The battery block has associated circuitry to measure its parameters and prevent overcharging. The battery block also includes a regulator and a battery charger unit in some embodiments. For most consumer electronics devices these changes could be incorporated into their battery packs. The slave in some embodiments also has a power management module **498** which performs functions to increase the battery life of the device. For instance, the power management unit in some embodiments puts certain modules in sleep or idle mode, and/or use frequency and voltage scaling to reduce power consumptions.

The calibration block also has a backscattering transceiver in some embodiments. If the RF transceiver is not powered on and the slave needs to communicate back to the master the calibration block uses antenna modulation in the form of backscattering (e.g. acknowledgement that it received data, or transmission of information like MAC ID, name, etc.). The received signals at the slave also include control information, where the master uses a control channel to inform the slaves what to do. The slave's control channel will demodulate and extract the commands for the slave to execute. Control information also includes read commands, write commands, turn on and off commands for the RF transceiver, scheduling for sending and receiving data, configuration and calibration of software radios for different standards.

In some embodiments, the slave stores identifying information about masters (or networked servers) that are authorized to charge the slave, such as the masters' media access control address (MAC ID), network IP address, name, serial number, product name and manufacturer, capabilities, etc. This information is stored in its memory **474** or in its configuration block **492**. The slave requests identifying information from the master or the network server **135**. The master (or the network server) is also proactive in some embodiments and sends its identifying information to the slave. Identifying information about the masters is stored in a networked database **150** in some embodiments. The slave in some embodiments checks the master's information with its authorized list and if there is not a match the configuration block **492** controls the switch **496** so power does not reach some or all of its circuits and/or battery.

The charging application is for distances of 1 meter or less. The energy efficiency of the system is the efficiency of the transmitter (DC to RF conversion) and the receiver (RF to DC conversion). The path loss is proportional to the inverse of the distance squared and inverse of the frequency squared. For instance at 60 GHz, at a distance of 1 meter the path loss is 64 dB. Thus, if the master transmits 100 mW the receiver gets about 20 dBm, since there is little loss. The conversion of this received RF to DC has about 10-20% efficiency, which translates into 10-20 mW.

This method is used both to charge the slave device and to send data to it in some embodiments. The higher carrier signal frequency enables the use of much smaller antennas. Because the antennas are small, in some embodiments the master devices (and even slave devices) have a number of antennas so that orientation with the charger can vary. When the slave has directional antenna, power efficiency is greatly enhanced. Power efficiency is also most optimal when the antenna of the master and slave are pointing directly towards each other.

In some embodiments, the master is a device (e.g. a PC) that has AC power or has a number of batteries and the slave (e.g. cell phone) has a battery that may require charging. Charging is either initiated by the slave or by the master. For example, the user places the slave near the master and presses a button on either the master or the slave to initiate charging (or charging is initiated after the master polls the slave). The slave makes a digital request to the master to be charged. Each antenna on the master receives a DC current. However, the antenna that is pointing to the slave device's antenna will receive the largest current. Each of the master's antennas effectively acts as a USB port since the antennas are used for communication as well as charging. If there are more than one slave then the master in some embodiments powers up all of them if need be and communicate with all of them using multiplexing. This eliminates the need for the master device to have multiple USB polls. Specifically, currently for each device there is a need for one USB port. For example, there is one for the mouse, one for the keyboard, one for a memory stick, etc. Using the embodiments of the current invention, they can all share the same wireless communication link with multiplexing for communication. For a USB type slave device that has no battery the master just acts like a remote battery so that the slave is able to communicate. For a more powerful slave device, such as a cell phone, the master acts like a charger and a communication device. If the stave has sensors (e.g. temperature, gyrator, pressure, and heart monitor) with electronic cir-

cuitry then they are powered up by the master, perform their sensing functions and communicate their data to the master, a network server, or some other device. In some embodiments, either or both the master and the slave have a touch screen and/or keyboard. For example, the master's keyboard is used for input and its touch screen is used for both input and output. Input data is then communicated to the slave. Likewise, when the slave has a keyboard and/or touch screen, input data is displayed on the slave's screen and is optionally communicated to the master.

FIG. **5** conceptually illustrates a process **500** for master-slave charging and communication in some embodiments of the invention. The exact sequence of events and command/information flows depends on whether the master or the slave initiates the communications. The commands are mostly transmitted over the control channel that uses a simpler modulation (e.g. AM, FM) than the data channel (although some embodiments send commands over the data channel). Channel coding is an optional step prior to modulation to improve data transmission and recovery under noisy conditions.

As shown m FIG. **5**, the master powers-up (at **505**) the slave. The power up is initiated by either the master or by the slave. For instance: (a) the slave makes a request for power (e.g. user presses a button on the slave for power or a low power slave automatically requests to be charged provided it has a battery charge, (b) the slave does not have charge, but the master polls the slave (either regularly or by manually pressing a button on the master) and then the slave requests power (c) the master detects the slave when it gets close to it, polls it and then the slave requests power. In some embodiments, when the master has AC power, the master goes to discovery mode where it polls frequently and goes off. In some embodiments, when a master has battery, the master goes to discovery mode and if it finds no slaves it slowly backs off (for instance going from 1 minute polling interval to 2 minute polling interval, then to 3 minute polling interval, etc.)

Next, slave sends (at **510**) request for power. Master receives the slave's request for power, demodulates (at **515**) it, and in response generates (at **520**) an RF wave. In some implementations the master automatically charges the slave or have some charging rules (e.g. if battery charge of slave is less than 50% then charge slave automatically). In these embodiments, operations **510** and **515** are skipped.

The slave receives the RF wave from the master, and the slave's power generator component converts the RF wave energy to a supply voltage. This is used (at **525**) to power-up the slave, charge its battery if it has one, or both. The slave then transmits (at **530**) information about itself (or its surrounding if it is a sensor) or makes (at **530**) requests. The slave optionally codes the information before modulation in some embodiments. For instance, the slave transmits information such as "I am this particular device", "I have data to be read", "I need to be charged", etc. Active slaves (e.g. cell phones or toys with batteries) use the power of the master instead of their own battery in some embodiments.

The master then receives and demodulates (at **535**) the slave's information/request (and decodes if necessary). The master's processing module determines (at **540**) whether the master continues the session. When the master determines that the session shall not be continued, the session is stopped (at **545**). When the session continues, the master's processing module generates (at **550**) commands (e.g. read from memory, write to memory, put into idle energy state, or other specific commands) which are optionally coded and modulated by the master's transceiver and transmitted.

The slave receives the master's signal, demodulates (at **555**) the received signal, and decodes the signal if necessary. Next, the slave executes (at **560**) the command (e.g. read, write, idle, specific command). In some embodiments, the slave optionally codes (at **565**) status information. The slave then modulates (at **565**) and transmits (at **565**) status information or other requests back to the master (e.g. the read data, write successful status, command successful status, acknowledgements). The master demodulates (at **535**) the slave's transmission and its processing module determines if it continues the session (decision to continue is possibly based on the information sent by the slave). In some embodiments, the slave's status transmission information includes low battery/charge information or requests for charging (at **565**), and the master's processing module processes the information/requests and charges the slave (at **535**).

FIG. **6** conceptually illustrates a master with different transmitters for power generation and communication in some embodiments of the invention. One transmitter of each type is shown for simplicity. As shown, the master **605** includes two separate transmitters (possibly with different frequencies) that are used for power generation and communication. The power transmitter **610** performs the function of a dedicated battery for the slaves. In some embodiments the power transmitter has narrow bandwidth but is high power compared to the communication transmitter or more wideband transmitters. A more focused antenna beam and a higher power transmitter increase the power transfer to the slave. The communication transmitter **615** and the power transmitter **610** in some embodiments have different frequencies from while in some embodiments the two transmitters have the same frequencies. In some embodiments, the frequencies are Federal Communications Commission (FCC) approved. The attenuator **620** prevents the transmitter from overloading the receiver **630** and allows the receiver to receive when the communication transmitter transmits. The transceiver's transmitter and receiver use a duplexer **650** that allows bi-directional communication over a single channel and antenna. In some embodiments, the filter **625** is chosen such that it rejects the power frequency but allows the communication frequency. A duplexer or combiner/de-combiner **635** is used with a single antenna **640**.

FIG. **7** conceptually illustrates a master and a slave that each includes separate antennas/transceivers for power generation and for communication in some embodiments of the invention. For simplicity, only one antenna/transceiver of each type is shown. As shown, the master **705** includes an antenna **715** and a transceiver **720** for power generation. The master also includes an antenna **725** and a transceiver **730** for communication. Similarly, the slave **710** includes an antenna **735** and a transceiver **740** for power generation and an antenna **745** and a transceiver **750** for communication. Thus, the antenna used for power generation has a directional focused beam pattern and is used with a high frequency to generate power at the slave. The control channel runs on the power transmitter's channel in some embodiments while the control channel runs on the communication transmitter's channel in other embodiments.

FIG. **8** conceptually illustrates a master in some embodiments that uses beam steering to change the direction of the beam when the slave is not directly in front of its beam of the invention. As shown, the master **805** has four antennas **810-825**. Slave A **830** is directly in front of antenna **810** and receives most of the energy of the RF beam of that antenna without any steering of the beam. Slave B **835**, however, is located at all angle to all of the master's antenna beams. The

efficiency of the system is less when the slave is positioned at an angle to the main beam's antenna. However, antenna **810** and **815** use beam steering to target the antenna of slave B **835**.

Furthermore, using both antennas **810** and **815** improves efficiency because the power generator of slave B **835** uses the energy simultaneously received from both antennas to generate a supply voltage. Once slave B **835** is powered up it uses one of the antennas for communication (e.g. the antenna with the more reliable signal or the stronger signal). As described by reference to FIG. **1** above, more than one master (either simultaneously or separately) charge a single slave (e.g. masters B **115** and C **120** charge slave **6** in FIG. **1**) or several slaves in some embodiments. In some embodiments the masters communicate with each other or alternatively a network server or remote user configures them to change their beam steering and other system parameters such that they maximize power transfer to a single slave or a plurality of slaves.

FIG. **9** conceptually illustrates a multi-antenna RF master in some embodiments of the invention that has a non-conductive spacer material (e.g., plastic) in front of its antenna **915**. This spacer **910** is used to enable the slave **920** to sit on it or get close to it. This creates a separation distance of several wavelengths between the master **905** antennas **915** and the slave **920** antennas **940** so that RF is used for charging. For instance, for a single antenna a separation of two or more wavelengths is needed. For multiple antennas more wavelengths are required, the number of which increases with the number of antennas for optimal beam forming. This could for example be used for wireless charging and wireless USB communication (since each of the master's antennas effectively acts as a USB port that is used for communication as well as charging). Without the separator the slave and the master could be too close to each other because of the short wavelengths of high frequency RF. If the master and the slave are too close to each other, some embodiments use induction charging instead of RF charging. Although FIG. **9** shows one slave antenna and several master antennas, in different embodiments of the invention either the slave or the master has one antenna, many antennas, or one or more antennas with sub-elements. In some embodiments, a slave has a non-conductive spacer material (e.g., plastic) in front of its antenna **940** (not shown) to enable the slave to sit on the master or come close to it.

III. Charging with Induction

FIG. **10** conceptually illustrates a master that uses induction to charge and communicate with a slave in some embodiments of the invention. The master **1005** supplies its primary coil **1010** with an alternating current, thereby creating an AC magnetic field. This magnetic field generates a voltage across the receiver's coil **1015**, which is rectified and smoothed with capacitors (not shown), and used for charging and communication. The power source for the master in different embodiments is an AC source that is converted to DC by an adaptor **1070**, a battery, or other mechanisms (e.g. induction from another master induction charger). A selection switch **1060** in some embodiments selects amongst the different power source options and provides the Vdd to the master's power transmitter. In some embodiments, the power transmitter **1020** uses a Phase Lock Loop (PLL) **1025** that uses a crystal's frequency to synthesize a new frequency. Alternatively, the power generator in some embodiments uses a Direct Digital Frequency Synthesizer (DDFS). The power transmitter then uses a Power Amplifier (PA) **1030** to drive its coil. In the embodiments shown in this figure and the other following figures that illustrate induction, one end of the coil is connected to the PA with the other end grounded. However, some embodiments use a differential coil where the two ends of the coil are connected to the + and − input of the PA. If no modulation is used, the transmitted energy is used to charge a slave through induction of the slave's coil. But if the transmitted signal is modulated (amplitude, frequency, phase or a combination) the signal is also used to transmit data as well as power in some embodiments. In some embodiments, when the transmitter is not sending data it just charges the slave **1035** or the slave communicates back on the same frequency or a close frequency. The slaves use backscattering to send information to the master. When the master is in receiving mode, the signal coming from its coil to the receiver is detected. The signal level is adjusted by an attenuator **1040** and a power amplifier **1045**. The detector **1050** then demodulates the signal. The resulting data is then passed on to the processing module **1055** that has a digital signal processing unit, a processor and memory, as well as a networking card (not shown).

FIG. **11** conceptually illustrates a master in some embodiments of the invention that uses the power transmitter for charging, and a separate transmitter for data transmission. Other components of FIG. **11** are similar to FIG. **10**. In some embodiments this data transmitter **1110** functions similar to Near Field Communication (NFC) since NFC also uses induction over very short distances for communication. FIG. **11** shows two separate coils **1115** and **1120** for the power transmitter and the data transmitter respectively. However, some embodiments have one physical coil used for both transmitters, where the power transmitter uses the entire coil and the data transmitter uses all or a smaller section of the same coil. This has the advantage of reducing the number of coils.

FIGS. **10** and **11** show the master with one coil per transmitter. However, in some embodiments the master has a number of coils so that the master charges and communicates with several slaves, or is able to transmit more power. For instance, networked masters in some embodiments have coils that are built-in to conference room tables and marked so that meeting participants can wirelessly charge their devices, connect to each other or to the Intranet/Internet, and transmit/receive information (this also applies to RF beam chargers where RF beam chargers such as master devices shown in FIGS. **2-4** and **6-9** are built-in to conference room tables and marked so that users can wirelessly charge their devices, connect to each other, connect to a networked server or to the Intranet/Internet, and transmit/receive information). Alternatively, the master has the form factor of a light weight pad that is used at home, in the car, on the go, or at work to charge and communicate with a number of devices. Such multi-coil or RF beam masters, tables or pads are smarter in some embodiments and have additional dedicated functions that resemble a small computer. For instance, in some embodiments they have a credit card reader so that users of slaves are not only able to charge their devices but also make payment transactions. Thus, a subset of the coils (or antennas) is dedicated to interface with near field communication (NFC) devices. For example, in some embodiments of the invention phones with NFC capabilities are not only charged but they are also used for contactless payment so that the user places the phone near those coils (or RF beams of a master in the case of RF-based master) in order to get authenticated and transmit payment information to a secured server on the Internet. Alternatively, credit cards in some embodiments have a chip so that they transmit their information to the master device. The

users may also choose to enter the payment information manually if they choose to do so. Some of the master's coils (or RF beam of a master in the case of RF-based master) are dedicated and optimized for communication, instead of having all coils be responsible for charging and communication in some embodiments. Likewise, some coils are dedicated and optimized for charging in some embodiments. These multi-coil masters, tables or light-weight portable pads use either a wireline or wireless connection to connect to the Internet, or an Intranet. They use their connection in some embodiments to communicate with a fax/printer for faxing and printing functions. In some embodiments these multi-coil masters, tables or light-weight portable pads charge a cell phone and then use the cell phone's networking functions (cellular, Wi Fi, Bluetooth®) to connect to an Intranet/Internet/server for authentication, web browsing, secure transaction, printing/faxing, etc. In other embodiments a tablet device (such as an IPad®) has a light-weight pad attached to it such that the tablet is wirelessly charged and then become a wireless charger to charge a cell phone. In other embodiments multi-coil masters, tables or light-weight portable pads have photocells to get charged and then charge other devices such as cell phones wirelessly. In yet other embodiments light-weight portable pads have USB or other types of ports for charging and communicating with other devices in a car (both wired or wirelessly). Such pads also have built-in GPS and Wireless LAN functionality in some embodiments.

If a master device has an array of n coils all n coils are used to charge and communicate with one slave in some embodiments, or all n coils are used for a number of slaves in some embodiments. The same channel is used for power transfer and then communication in some embodiments. In some embodiments, every coil has a built-in transceiver. In other embodiments a subset of the coils has built-in transceivers. During a calibration and configuration stage the master and the slave exchange information in order to get to know each other. For example, the master instructs which slaves should be on or off in some embodiments. Frequency and time hopping are coordinated between the master and the slaves in some embodiments for selection amongst a plurality of slaves, as well as additional security. Thus, the master transmits configuration information to the slaves, such as coil frequency and hopping algorithms. The slaves send back acknowledgements or the data to make sure they received it correctly. The slaves also transmit their voltage and current requirements to the master in some embodiments. If a coil at position P at time t has frequency f then it can be represented by (f, t, P). Frequency hopping is a method where each coil in the matrix of coils is driven by a different frequency f at different time periods. For example coil **1** has frequency f**1** for t**1** seconds, frequency f**2** for t**2** seconds, etc. Time hopping is the process where each coil in the matrix is turned on and off at different time periods.

FIG. **12** conceptually illustrates a master **1205** that has a power transmitter for each of its coils **1210** in some embodiments of the invention. Thus, each coil (or a subset of the coils) has a different frequency to implement frequency hopping. In some embodiments, the master **1205** also makes the power on each transmitter **1215** on and off to have time hopping. Other components of the master (which in different embodiments are similar to components shown in FIG. **10**, **11**, or **20**, or **21**) are not shown for simplicity. FIG. **13** conceptually illustrates a master in some embodiments with coils **1310** that have the same frequency and a multiplexer **1315** to activate coils at different times. The PLL **1320** in some embodiments also change the frequency if the master wants to have both frequency and time hopping. Other components of the master are not shown for simplicity.

FIG. **14** conceptually illustrates induction in some embodiments between the master and the slave by using more than one coil on the master or the slave in order to increase power and communication efficiency. Other components of the master (which in different embodiments are similar to components shown in FIG. **10**, **11**, or **20**, or **21**) are not shown for simplicity. As shown, the master **1405** includes four coils **1410-1425**, slave A **1430** includes two coils **1435-1440**, and slave B **1445** includes one coil **1450**. As shown in the example of FIG. **14**, slave A's two coils **1435-1440** couple with one coil **1410** on the master **1405**. Likewise, the master's coils **1415-1425** couple with slave B's one coil **1450**. In the general case in some embodiments X coils on the master couple with Y coils on the slave. In some embodiments, coupled master coils such as **1415-1425** have the same frequency. In other embodiments, the coils have different frequencies f**1**, f**2** and f**3**. In these embodiments, the frequencies are within the bandwidth of the transformer system so that they couple and their power is added together.

In some embodiments, both the master and the slave have a matrix of coils. Different embodiments arrange the coils differently, for instance matrix of coils are arranged in 1D (one line), 2D (a plane), or 3D (multiple planes covering a volume). Some embodiments arrange the coils in different patterns (rectangular grid, triangular grid, circular grid, hexagonal grid, irregular grid, etc). The master then requests the slave's coil patterns. The slave sends it coil pattern to the master. The master then activates a subset of its coils in order to generate a transmit coil pattern that transfers maximum power to the slave. The slave then informs the master how much power each of its coils receives. The master then changes it's transmit coil pattern in order to optimize power transfer to the slave. In some embodiments this process is repeated until optimum power transfer is achieved.

FIG. **15** conceptually illustrates a process **1500** of some embodiments of the invention to change a master device's coil pattern in some embodiments of the invention. As shown, process **1500** receives (at **1505**) the slave's coil pattern. Next, the process activates (at **1510**) some or all of master coils in order to transmit maximum induction power to the salve's coils.

Next, the process receives (at **1515**) information regarding the amount of power each slave coil receives. In different embodiments, the master receives this information from the slave (1) using RFID and backscattering techniques, (2) through RF data transmission from the slave's RF antennas, or (3) through data transmission from one or more of the slave's coils.

The process then determines (at **1520**) whether on optimized power transfer is achieved (e.g., when the rate of power transfer satisfies a certain threshold). When the process determines that optimized power transfer is achieved, the process continues (at **1530**) induction power transfer using the same coil pattern. The power transfer continues until a set of predetermined criteria (e.g., a certain amount of time elapses a signal is received from the slave, slave's coil impedance changes, etc.). The process then exits.

Otherwise, when the process determines that optimized power transfer is not achieved, the process changes (at **1530**) the transmit coil pattern. The process then proceeds to **1515** which was described above.

FIG. **16** conceptually illustrates a multi-coil slave with induction charging in some embodiments of the invention. FIG. **16** shows a general diagram of a slave device **1605** that

has M coils **1610**. While in some embodiments slave devices have one coil in other embodiment (such as the embodiment shown in FIG. **16**) have more than one coil. As shown, a P number of coils are used for power absorption and an N number of coils are used for data communication, where P≤M and N≤M and P+N=M. The system is reconfigurable so that the numbers P and N are changed so that different numbers of coils are used for power and data communication as needed. When a slave comes close to a master the master detects a change in its load. The master then gives power to the slave. The AC magnetic fields generated by the primary coils of the master charger generate voltages across the coils of the slave. The power harvester **1615** rectifies and smoothes these voltages and its output are used for charging and power. As shown, the power harvester **1615** is connected to the coils through the front-end switching block **1690**. Initially, a small portion of the circuits, such as the calibration and configuration block **1620**, are turned on with DC power from the power harvester. Then the master uses data modulation or some other modulation method to send configuration information to the slave's calibration and configuration block. This configuration information includes one or more of the master's frequency, master's data and modulation method, and master's identifying information. The slave's calibration and configuration block monitors **1620** the signal before or after the power harvester **1615** and uses the configuration information together with tuning, calibration, and impedance matching of each coil with its rectifier (not shown) to maximize the signal. After the signal is maximized then the slave's calibration and configuration block adjusts a switch **1625** so that power becomes available for the battery **1630** (if the slave has one) and/or other circuits such as the data transceiver **1635** and the processing module **1640**. The battery block **1630** has associated circuitry to measure its parameters and prevent overcharging. The battery block **1630** also includes a regulator and a battery charger unit (not shown) in some embodiments. A voltage converter **1650** is used to provide different voltage levels as required by the different slave modules. The slave in some embodiments also has a power management module **1655** to increase the battery life of the device.

In some embodiments the slave stores identifying information about masters (or networked servers) that are authorized to charge it. This is stored either in the slave's calibration and configuration block or the slave's memory (not shown). The slave checks the configuration information sent from the master to the slave for the master's identifying information. If the information is not included the slave requests it. The slave then checks this information with the authorized list and if there is not a match the slave's calibration and configuration block disables charging and/or power-up by controlling the position of the switch.

The slave's data transceiver **1635** is reconfigurable so that K transmitters **1665** and P receivers **1670** are used. For instance, more than one transmitter in some embodiments is used to drive a single coil. Likewise, more than one receiver in some embodiments is used to receive from a single coil. In some embodiments, a master device has a similar configuration. If the slave is only charging its battery, once the battery is charged the slave in some embodiments disables its coil(s) or changes its impedance so that the master knows the slave does not need more power for charging. During data communication the load modulation unit **1660** modulates the load for the coils. When the load on the slave's coils changes then the system acts like a transformer and the same effect is shown on the transmitter's coils through coupling. The changes required to implement this system can be incorporated into the battery pack of most electronics systems (conventional battery packs typically include rechargeable batteries that use AC power adapters. These battery packs could be changed to include the components of FIG. **16** instead).

The slave in some embodiments optionally has sensors **1675** with electronic circuitry. Once the slave is powered up the sensors perform their sensing functions and communicate their data to the induction charger, another master, or a network server. Some examples of sensors are temperature, gyrator, pressure, and heart monitor. The master and the slave in some embodiments optionally have a touch screen and/or keyboard for entering data which is displayed on the screen and/or communicated, respectively, to the slave and the master.

FIG. **17** conceptually illustrates a process **1700** for reconfiguring coils of a slave device in some embodiments of the invention. As shown, the slave optionally receives (at **1705**) induction power for a certain period of time from the master to power up some or all of the slave's circuitries. In some embodiments, when the slave initially has more than a certain amount of power, operation **1705** is skipped.

Next, the process receives (at **1710**) configuration information from the master. The master configuration information includes one or more of the master's operating parameters such as the operating wireless communication frequency of the master (which is used for communication between the master and slave), master's data and modulation method, and master's identifying information. The process then reconfigures (at **1715**) the slave's coils by using the received configuration information and one or more tuning, calibration, and impedance matching to maximize the received induction power. Coarse calibration and fine tuning are performed in some embodiments to ensure that all elements on the master and slave have the same frequency and are tuned for it. Likewise, impedance matching is performed in some embodiments such that the master and the slave are matched for communication. The process then receives (at **1720**) induction power from the master device until the generated power in the slave reaches a certain threshold. The process then exits.

FIG. **18** conceptually illustrates a process **1800** for terminating power generation in the slave in some embodiments of the invention. As shown, the process receives (at **1800**) power through the induction. Next, the process determines whether enough power is generated to satisfy a certain threshold. For instance, the process determines whether a battery or a capacitor in the slave is charged to a certain voltage level.

When the generated power does satisfy the threshold, the process proceeds to **1805** to continue receiving power through induction. Otherwise, the process either disables the coils (e.g., by turn a switch on or off) or changes the coils impedances as a signal to the master device to stop transmitting induction power. The process then exits. Some embodiments use a similar process to terminate generation of power through conversation of RF energy using a similar process as process **1800**. In some of these embodiments, the slave's voltage converter **477** is disconnected from the slave's power generator **473** antennas is disconnected from the slave's power transceiver. In other embodiments, the slave's antennas **499** are turned off.

FIG. **19** conceptually illustrates a process **1900** for configuring the slave's coils for either power generation or data transmission in some embodiments of the invention. As shown, the process configures (at **1905**) salve's coils to use

some or all of the coils for receiving power through induction and some or none of the coils for data transmission.

Next, the process receives (at **1910**) power through induction at the slave's coils. Next, the process determines (at **1915**) whether enough power is generated at the slave to satisfy a certain threshold. For instance, the process determines whether a battery or a capacitor in the slave is charged to a certain voltage level. When the generated power has not satisfied the threshold, the process proceeds to **1910** to receive more induction power. Otherwise, the process reconfigures the coils that are used for power generation and data transmission. For instance, when the power in slave reaches a maximum threshold, no coils are used for power generation and some or all coils are used for data transmission. As another example, when the power reaches a certain threshold, the number of coils used for data transmission is increased and the number of coils used for power generation is decreased. In this example, power generation through induction continues until the power level reaches a maximum threshold.

IV. Charging with Both RF and Induction in a Hybrid Configuration

Although the embodiments discussed by reference to FIGS. **1-19** described masters with either coils or RF antennas, the invention is not restricted to these embodiments. Specifically, in some embodiments, both the master and the slave have induction coils and RF antennas.

For instance, in some embodiments a master as shown in FIGS. **1-4** and **6-9** in addition to RF antennas has coils and associated circuitry as shown to any of FIGS. **10-14**. Also, in some embodiments a slave as shown in FIGS. **1-4** and **7** in addition to RF antennas has coils and associated circuitry as shown in FIGS. **12-16**. Because the induction frequency and RF frequencies are far apart, each element (i.e. each master and slave element) is calibrated to have two different operating frequencies, one for induction and one for RF.

FIG. **20** conceptually illustrates a hybrid system of some embodiments of the invention where the master uses an induction charger as a power source to power itself and then uses a high frequency directional and focused RF beam to power up one or more slave devices and communicate with them. As shown, the master **2005** includes a rechargeable power supply **2010**, a power harvester **2015** and a coil **2020**. The induction charger **2025** has a power source (AC power, battery, etc). The power is connected to the induction charger's power transmitter **2035** (e.g., after an AC source is converted to DC through an adaptor **2080**), which is connected to a primary coil **2040** with a reference ground point **2045**. When the master's secondary coil is close to the charger's primary coil it receives power through inductance and its power harvester **2015** charges the master's rechargeable power supply **2010**. The master then uses a high frequency directional RF beam to power up one or more slave devices **2050** (or charge the slave device's battery if it has one) and communicates with it, as discussed by reference to FIG. **2-4**. FIG. **20** shows only one embodiment of induction charging, and there are other implementations and methods as discussed herein.

FIG. **21** conceptually illustrates a master in some embodiments of the invention that acts as an induction charger and uses induction to charge the slave before using its high frequency directional beam to communicate with the slave. The master **2105** has access to power (AC power or battery). The master's power is connected to a power transmitter **2110** that uses a multiplexer **2115** to power a matrix of coils **2120**. This is similar to the arrangement shown in FIG. **13**, although each coil or a subset of coils may also have their own individual power transmitters (as in FIG. **12**). The slave **2125** includes a voltage converter **2130**, a rechargeable power supply **2135**, a power harvester **2140**, a matrix of coils **2145** and other blocks of FIG. **16** that are not shown for simplicity (e.g. calibration and configuration block). When the master's primary coils are close to the slave's coils the slave receives power through inductance. The master then uses a high frequency directional RF beam to communicate with the slave. FIG. **21** shows only one embodiment of induction charging, and there are other implementations and methods as discussed herein.

FIG. **22** conceptually illustrates two slaves in some embodiments of the invention that use the power of a master's coils to power up or charge their batteries and then communicate with each other using their communication transceivers. As shown, the two slaves **2205** and **2210** are placed on or near a master **2215** induction charger. An example of such an embodiment (without any limitations) is: slave A **2205** is a cell phone, slave **2 2210** is a memory stick with data, and the master is a PC with an induction pad. The two slaves use the power of the master's coils **2220** to power-up or charge their batteries (not shown). The two slaves then use their RF transceiver (not shown) with directional beams (or any other communication transceiver) to communicate directly with each other. In other embodiments, the two slaves use the master and induction coupling to communicate with each other. For instance, where one or both of the slaves do not have an RF communication transceiver and slave A wants to communicate with stave B, Slave A uses induction coupling with the master to send its request for slave B to the master. The master uses induction coupling to communicate that request to slave B. Slave B then uses induction coupling to reply to the master, and the master uses induction coupling to forward the reply to slave A. In some embodiments more than two slaves get charged and communicate with each other. A network server **2225** in some embodiments controls the master and the slaves through a network **2230**.

The description so far has discussed induction charging and focused RF beam as separate embodiments. FIG. **21** did discuss a master that uses induction for charging and RF for communication. That role is reversed in some embodiments of the invention where RF is used for charging and induction is used for communication. But it is possible to view the coil and the RF antennas as elements. In some embodiments one element is designed for the master, slave or both so that at low frequencies the element is like a coil inductor and at high frequencies it is like an antenna. This means that at the same time one has RF power and induction power. Low frequencies mean big coils and high frequencies mean small coils. If the distance is far enough (e.g., more than 2-3 wavelengths) compared to the signal wavelength then waves are created and the element is used for RF. If the distance is short then waves cannot be created and it will be more like induction. So distance is used to select one mode or the mode is chosen automatically. In other embodiments the master, slave or both have two different elements for different distances (one for short distances and one for far distances). In these embodiments, the master does time multiplexing between the two or select one over the other. This depends on the slave and whether it has each element for induction and RF antenna. If the master is charging and communicating with a group of antennas then the selection of induction or RF depends on the configuration of the slaves as to which ones have induction, antenna or both.

FIG. **23** conceptually illustrates an element **2300** in some embodiments of the invention that is designed to be a single

coil **2305** at low frequencies and a multiple antenna sub-elements **2310** at high frequencies with beam forming capabilities. The element in some embodiments physically resembles a coil. In some embodiments, the length of the coil is much bigger than the size of antenna required for RF at high frequencies. For instance in the frequency range of 50-60 GHz the element is of the order of centimeters, whereas the antenna sub-elements are of the order of millimeters. The element is divided into multiple RF antennas sub-elements and these multiple antenna sub-elements are used to do beam forming. Each sub-element is of the order of half a wavelength or less and operates at two separate frequencies, one lower frequency for the coil **2305** and one higher frequency for the antenna **2310**. Each sub-element has an associated port **2315** that is frequency dependent (e.g. a capacitor or an LC circuit) such that at high frequency the sub-element acts as an antenna, but at low frequencies the sub-elements act as one connected coil. In FIG. **23**, these ports **2315** are not shown for the low frequency operation to emphasize that the element **2300** acts as a single coil **2305** in low frequencies. All of the discussions throughout this specification regarding slave and master configuration and control and communication apply to embodiments that use the element shown in FIG. **23**. For instance, in some embodiments, the element is used in one or more of the master and slave devices shown in FIGS. **1-4**, **6-14**, **16**, and **20-22**. Also, one of the antennas **2300** is used for control and communication in some embodiments. In other embodiments, all antennas are used for control, communication and power. If low frequency and high frequency are used at the same time the communication channel in some embodiments is RF or induction or both.

V. Computer System

Many of the above-described processes and modules are implemented as software processes that are specified as a set of instructions recorded on a computer readable storage medium (also referred to as "computer readable medium" or "machine readable medium"). These instructions are executed by one or more computational elements, such as one or more processing units of one or more processors or other computational elements like Application-Specific ICs ("ASIC") and Field Programmable Cate Arrays ("FPGA"). The execution of these instructions causes the set of computational elements to perform the actions indicated in the instructions. Computer is meant in its broadest sense, and can include any electronic device with a processor (e.g., moving scanner, mobile device, access point, etc.). Examples of computer readable media include, but are not limited to, CD-ROMs, flash drives, RAM chips, hard drives, EPROMs, etc. The computer readable media does not include carrier waves and/or electronic signals passing wirelessly or over wired connection.

In this specification, the term "software" includes firmware residing in read-only memory or applications stored in magnetic storage that can be read into memory for processing by one or more processors. Also, in some embodiments, multiple software inventions can be implemented as parts of a larger program while remaining distinct software inventions. In some embodiments, multiple software inventions can also be implemented as separate programs. Finally, any combination of separate programs that together implement a software invention described herein is within the scope of the invention. In some embodiments, the software programs when installed to operate on one or more computer systems define one or more specific machine implementations that execute and perform the operations of the software programs.

FIG. **24** conceptually illustrates a computer system **2400** with which some embodiments of the invention are implemented. For example, the masters, slaves, network servers, access points, and processes described above by reference to FIGS. **1-23** may be at least partially implemented using sets of instructions that are run on the computer system **2400**.

Such a computer system includes various types of computer readable mediums and interfaces for various other types of computer readable mediums. Computer system **2400** includes a bus **2410**, at least one processing unit (e.g., a processor) **2420**, a system memory **2430**, a read-only memory (ROM) **2440**, a permanent storage device **2450**, input devices **2470**, output devices **2480**, and a network connection **2490**. The components of the computer system **2400** are electronic devices that automatically perform operations based on digital and/or analog input signals. The various examples of user inputs described above may be at least partially implemented using sets of instructions that are run on the computer system **2400** and displayed using the output devices **2480**.

One of ordinary skill in the art will recognize that the computer system **2400** may be embodied in other specific forms without deviating from the spirit of the invention. For instance, the computer system may be implemented using various specific devices either alone or in combination. For example, a local Personal Computer (PC) may include the input devices **2470** and output devices **2480**, while a remote PC may include the other devices **2410-2450**, with the local PC connected to the remote PC through a network that the local PC accesses through its network connection **2490** (where the remote PC is also connected to the network through a network connection).

The bus **2410** collectively represents all system, peripheral, and chipset buses that communicatively connect the numerous internal devices of the computer system **2400**. In some cases, the bus **2410** may include wireless and/or optical communication pathways in addition to or in place of wired connections. For example, the input devices **2470** and/or output devices **2480** may be coupled to the system **2400** using a wireless local area network (W-LAN) connection, Bluetooth®, or some other wireless connection protocol or system.

The bus **2410** communicatively connects, for example, the processor **2420** with the system memory **2430**, the ROM **2440**, and the permanent storage device **2450**. From these various memory units, the processor **2420** retrieves instructions to execute and data to process in order to execute the processes of some embodiments. In some embodiments the processor includes an FPGA, an ASIC, or various other electronic components for execution instructions.

The ROM **2440** stores static data and instructions that are needed by the processor **2420** and other modules of the computer system. The permanent storage device **2450**, on the other hand, is a read-and-write memory device. This device is a non-volatile memory unit that stores instructions and data even when the computer system **2400** is off. Some embodiments of the invention use a mass-storage device (such as a magnetic or optical disk and its corresponding disk drive) as the permanent storage device **2450**.

Other embodiments use a removable storage device (such as a floppy disk, flash drive, or CD-ROM) as the permanent storage device. Like the permanent storage device **2450**, the system memory **2430** is a read-and-write memory device. However, unlike storage device **2450**, the system memory **2430** is a volatile read-and-write memory, such as a random access memory (RAM). The system memory stores some of the instructions and data that the processor needs at runtime.

In some embodiments, the sets of instructions and/or data used to implement the invention's processes are stored in the system memory **2430**, the permanent storage device **2450**, and/or the read-only memory **2440**. For example, the various memory units include instructions for processing multimedia items in accordance with some embodiments.

The bus **2410** also connects to the input devices **2470** and output devices **2480**. The input devices **2470** enable the user to communicate information and select commands to the computer system. The input devices include alphanumeric keyboards and pointing devices (also called "cursor control devices"). The input devices also include audio input devices (e.g., microphones, MIDI musical instruments, etc.) and video input devices (e.g., video cameras, still cameras, optical scanning devices, etc.). The output devices **2480** include printers, electronic display devices that display still or moving images, and electronic audio devices that play audio generated by the computer system. For instance, these display devices may display a graphical user interface (GUI). The display devices include devices such as cathode ray tubes ("CRT"), liquid crystal displays ("LCD"), plasma display panels ("PDP"), surface-conduction electron-emitter displays (alternatively referred to as a "surface electron display" or "SED"), etc. The audio devices include a PC's sound card and speakers, a speaker on a cellular phone, a Bluetooth® earpiece, etc. Some or all of these output devices may be wirelessly or optically connected to the computer system.

Finally, as shown in FIG. **24**, bus **2410** also couples computer **2400** to a network **2490** through a network adapter (not shown). In this manner, the computer can be a part of a network of computers (such as a local area network ("LAN"), a wide area network ("WAN"), an Intranet, or a network of networks, such as the Internet. For example, the computer **2400** may be coupled to a web server (network **2490**) so that a web browser executing on the computer **2400** can interact with the web server as a user interacts with a GUI that operates in the web browser.

As mentioned above, some embodiments include electronic components, such as microprocessors, storage and memory that store computer program instructions in a machine-readable or computer-readable medium (alternatively referred to as computer-readable storage media, machine-readable media, or machine-readable storage media). Some examples of such computer-readable media include RAM, ROM, read-only compact discs (CD-ROM), recordable compact discs (CD-R), rewritable compact discs (CD-RW), read-only digital versatile discs (e.g., DVD-ROM, dual-layer DVD-ROM), a variety of recordable/rewritable DVDs (e.g., DVD-RAM, DVD-RW, DVD+RW, etc.), flash memory (e.g., SD cards, mini-SD cards, micro-SD cards, etc.), magnetic and/or solid state hard drives, read-only and recordable blu-ray discs, ultra density optical discs, any other optical or magnetic media, and floppy disks. The computer-readable media may store a computer program that is executable by a device such as an electronics device, a microprocessor, a processor, a multi-processor (e.g., an IC with several processing units on it) and includes sets of instructions for performing various operations. The computer program excludes any wireless signals, wired download signals, and/or any other ephemeral signals.

Examples of hardware devices configured to store and execute sets of instructions include, but are not limited to, ASICs, FPGAs, programmable logic devices ("PLDs"), ROM, and RAM devices. Examples of computer programs or computer code include machine code, such as produced by a compiler, and files including higher-level code that are executed by a computer, an electronic component, or a microprocessor using an interpreter.

As used in this specification and any claims of this application, the terms "computer", "computer system", "server", "processor", and "memory" all refer to electronic or other technological devices. These terms exclude people or groups of people. For the purposes of this specification, the terms display or displaying mean displaying on an electronic device. As used in this specification and any claims of this application, the terms "computer readable medium", "computer readable media", "machine readable medium", and "machine readable media" are entirely restricted to non-transitory, tangible, physical objects that store information in a form that is readable by a computer. These terms exclude any wireless signals, wired download signals, and/or any other ephemeral signals.

It should be recognized by one of ordinary skill in the art that any or all of the components of computer system **2400** may be used in conjunction with the invention. Moreover, one of ordinary skill in the art will appreciate that any other system configuration may also be used in conjunction with the invention or components of the invention.

While the invention has been described with reference to numerous specific details, one of ordinary skill in the art will recognize that the invention can be embodied in other specific forms without departing from the spirit of the invention. Moreover, while the examples shown illustrate many individual modules as separate blocks, one of ordinary skill in the art would recognize that some embodiments may combine these modules into a single functional block or element. One of ordinary skill in the art would also recognize that some embodiments may divide a particular module into multiple modules. Furthermore, specific details (such as details shown in FIGS. **1-23**) are given as an example and it is possible to use different circuit implementations to achieve the same results without deviating from the teachings of the invention. The words "embodiment" and "embodiments" are used throughout this specification to refer to the embodiments of the current invention.

One of ordinary skill in the art would understand that the invention is not to be limited by the foregoing illustrative details, but rather is to be defined by the appended claims.

What is claimed is:

1. A battery-operated device comprising:

a battery;

an electronic circuitry configured to be powered by the battery; and

a converter configured to receive energy from any of a plurality of authorized chargers, and generate power from the energy for charging the battery using the power;

the battery-operated device configured to:

receive a charger identification from a charger;

determine whether the charger identification is in a list of charger identifications belonging to the plurality of authorized chargers;

in response to determining that the charger identification is in the list of charger identifications:

receive the energy from the charger;

generate, using the converter, the power from the energy received from the charger;

charge the battery using the power received from the converter; and

use the battery to power the electronic circuitry.

2. The battery-operated device of claim **1** further comprising:

a coil configured to receive the energy by induction from the charger.

3. The battery-operated device of claim **2** further comprising:

a memory;

wherein the battery-operated device is further configured to store the list of charger identifications in the memory.

4. The battery-operated device of claim **2** further configured to:

in response to determining that the charger identification is not in the list of charger identifications, prevent charging of the battery by the charger.

5. The battery-operated device of claim **2**, wherein the charger identification is one of a MAC ID, an IP address, a name, a serial number, a product name, or a manufacturer name.

6. The battery-operated device of claim **2**, wherein the charger identification indicates one or more capabilities of the charger.

7. The battery-operated device of claim **2** further comprising:

a capacitor, wherein the converter is configured to store the power in the capacitor.

8. The battery-operated device of claim **2** further configured to:

use a same channel for receiving, from the charger, both the energy and the charger identification.

9. The battery-operated device of claim **2** further configured to:

use a first channel for receiving the energy from the charger;

use a second channel for receiving the charger identification from the charger;

wherein the first channel is different than the second channel.

10. The battery-operated device of claim **1** further comprising:

an antenna configured to receive radio frequency (RF) energy from the charger for conversion to the power by the converter for charging the battery.

11. A method of charging a battery-operated device including a battery, an electronic circuitry configured to be powered by the battery, and a converter configured to receive energy from any of a plurality of authorized chargers, and generate power from the energy for charging the battery using the power, the method comprising:

receiving a charger identification from a charger;

determining whether the charger identification is in a list of charger identifications belonging to the plurality of authorized chargers;

in response to determining that the charger identification is in the list of charger identifications:

receiving the energy from the charger;

generating, using the converter, the power from the energy received from the charger;

charging the battery using the power received from the converter; and

using the battery to power the electronic circuitry.

12. The method of claim **11**, wherein the battery-operated device further includes a coil, and wherein the method further comprises:

receiving, using the coil, the energy by induction from the charger.

13. The method of claim **12**, wherein the battery-operated device further includes a memory having the list of charger identifications stored therein.

14. The method of claim **12** further comprising:

in response to determining that the charger identification is not in the list of charger identifications, preventing charging of the battery by the charger.

15. The method of claim **12**, wherein the charger identification is one of a MAC ID, an IP address, a name, a serial number, a product name, or a manufacturer name.

16. The method of claim **12**, wherein the charger identification indicates one or more capabilities of the charger.

17. The method of claim **12**, wherein the battery-operated device further includes a capacitor, and wherein the method further comprises:

storing, by the converter, the power in the capacitor.

18. The method of claim **12** further comprising:

using a same channel for receiving, from the charger, both the energy and the charger identification.

19. The method of claim **12** further comprising:

using a first channel for receiving the energy from the charger;

using a second channel for receiving the charger identification from the charger;

wherein the first channel is different than the second channel.

20. The method of claim **11**, wherein the battery-operated device further includes an antenna, and wherein the method further comprises:

receiving, using the antenna, radio frequency (RF) energy from the charger for conversion to the power by the converter for charging the battery.

* * * * *

EXHIBIT 2

US10938246B2	AT&T Radiant Max 5G ("The accused product")
1. A battery-operated device comprising:	The accused product is a battery-operated device (e.g., smartphone). 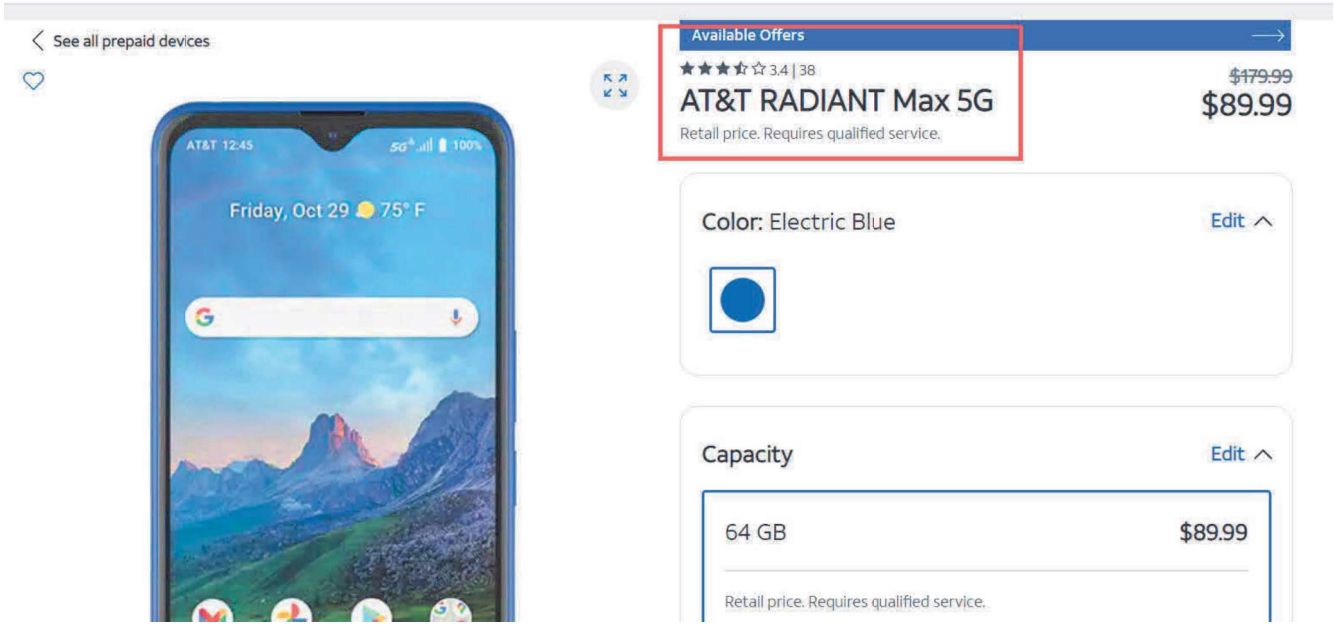 https://www.att.com/buy/prepaid-phones/att-radiant-max-5g-64gb-electric-blue-prepaid.html

EXHIBIT 2

	Battery
	Battery capacity: 4,750mAh (non-removable)
	Talk time (hours): Up to 23.05
	Standby time (days): Up to 18
	Audio playback time (hours): Speaker: Up to 24 Headset: Up to 30
	Wireless charging capable: ✓
	Fast charging capable: ✓
	Time to charge to 50%: Up to 60 minutes
	Time to charge to 100%: Up to 160 minutes
	https://www.att.com/buy/prepaid-phones/att-radiant-max-5g-64gb-electric-blue-prepaid.html

EXHIBIT 2

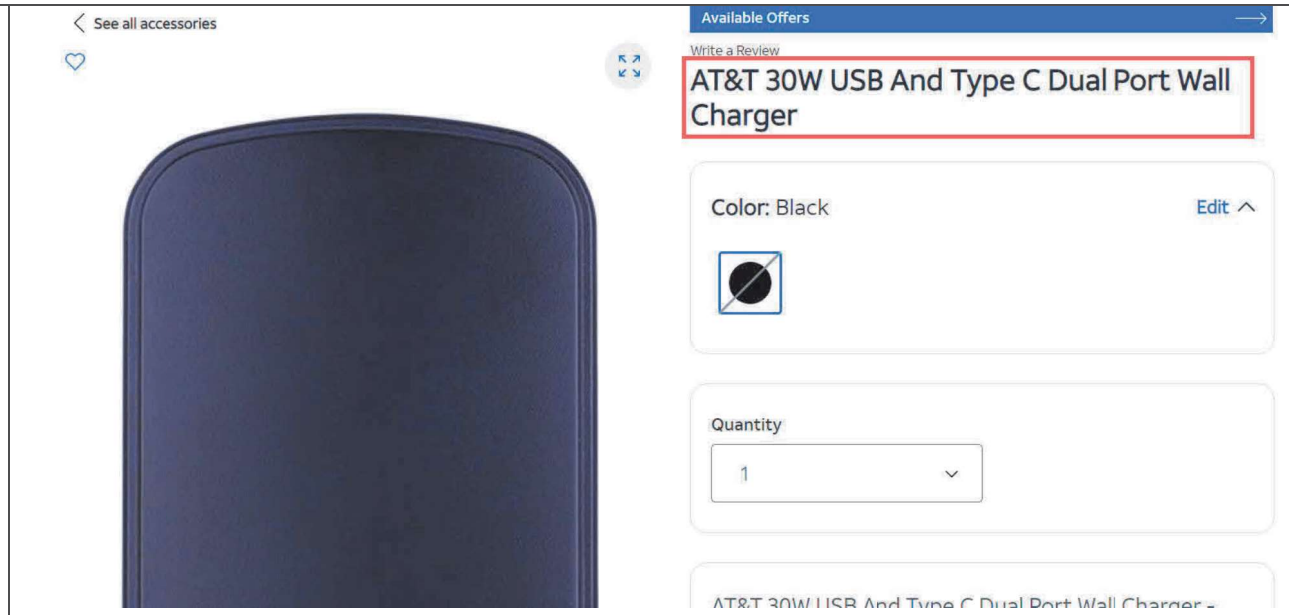

https://www.att.com/buy/accessories/Chargers/att-30w-usb-and-type-c-dual-port-wall-charger-black.html

EXHIBIT 2

	Overview Portable, lightweight wall charger delivers a powerful 30W charge to both a USB-A and USB-C charging port at once. AT&T's fast charge technology turns this wall charger into a safe and rapid charging hub. Charges compatible devices up to 70% faster than standard wall chargers and can get your device up to 50% charged in 30 minutes or less. Discrete LED indicator turns blue when fully charged. Power Delivery Output (USB-C): 5V/3A, 9V2A, 12V/1.5A. Standard USB-A Output: 5V/2.4A. USB Power Delivery 3.0 PPS Certified. Use with AT&T cables for best experience. Key Features and specs: Charges up to 70% faster than standard chargers Charges up to 50% in 30 minutes Charges 2 devices simultaneously with Single USB-C port + Single USB-A port Foldable AC prongs Total output: 30W rapidly charges most portable devices Power Delivery Output (USB-C): 5V/3A, 9V2A, 12V/1.5A USB Power Delivery 3.0 PPS Certified Standard USB-A Output: 5V/2.4A https://www.att.com/buy/accessories/Chargers/att-30w-usb-and-type-c-dual-port-wall-charger-black.html

EXHIBIT 2

	Compatible Products **Alcatel** AXEL **Apple** iPhone SE 3rd Gen (2022), iPhone 13 mini, iPhone 13 Pro Max, iPhone 13 Pro, iPhone 13, iPhone 12 mini iPhone 12 Pro Max, iPhone 12 Pro, iPhone 12, iPad mini (2021), iPad Pro 12.9-inch (2021), iPad Pro 11-inch (2021) iPad Air 5th Gen (2022), iPad Air (2020), iPad 9th Generation (2021), Watch SE 44mm, Watch SE 40mm, Watch Nike SE 44mm Watch Nike SE 40mm, iPad 8th generation, Watch Series 6 44mm, Watch Series 6 40mm, Watch Nike Series 6 44mm, Watch Nike Series 6 40mm **AT&T** RADIANT Max 5G, Global Modem USB800 Fusion 5G, Calypso 2, Calypso Unite Express 2, Turbo Hotspot 2 RADIANT Max, AT&T Fusion Z https://www.att.com/buy/accessories/Chargers/att-30w-usb-and-type-c-dual-port-wall-charger-black.html
a battery;	The accused product comprises a battery.

EXHIBIT 2

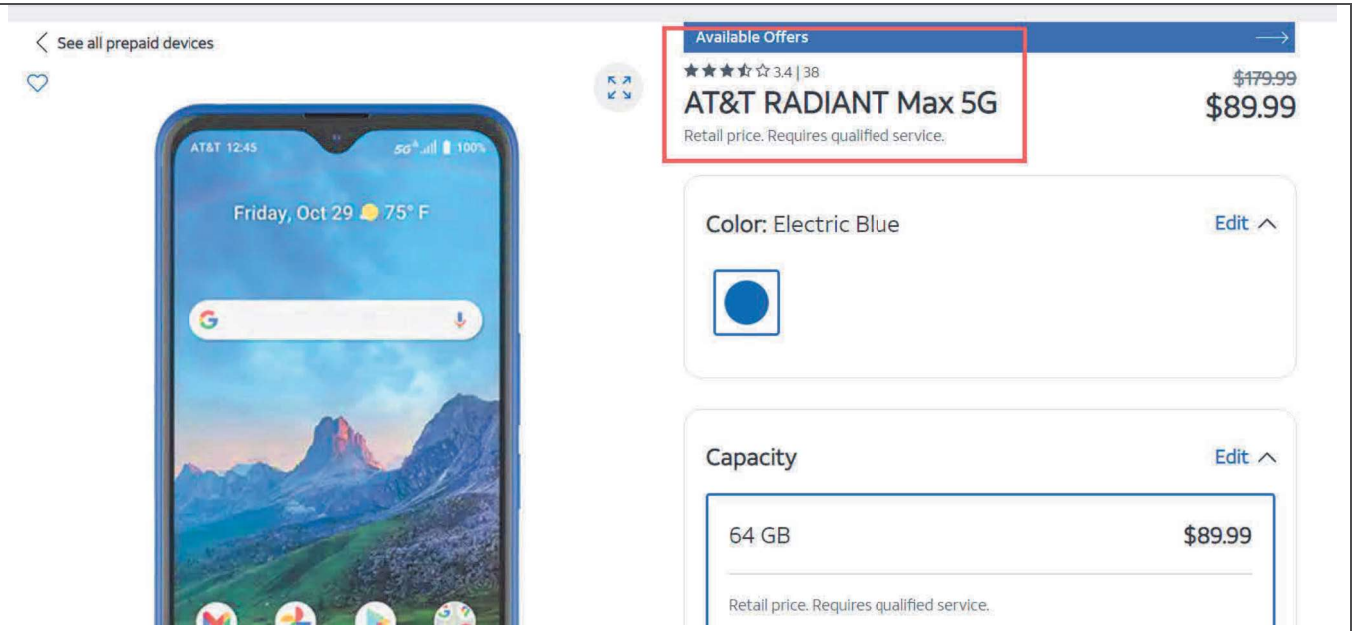

https://www.att.com/buy/prepaid-phones/att-radiant-max-5g-64gb-electric-blue-prepaid.html

EXHIBIT 2

Battery

Battery capacity	4,750mAh (non-removable)
Talk time (hours)	Up to 23.05
Standby time (days)	Up to 18
Audio playback time (hours)	Speaker: Up to 24 Headset: Up to 30
Wireless charging capable	✓
Fast charging capable	✓
Time to charge to 50%	Up to 60 minutes
Time to charge to 100%	Up to 160 minutes

https://www.att.com/buy/prepaid-phones/att-radiant-max-5g-64gb-electric-blue-prepaid.html

EXHIBIT 2

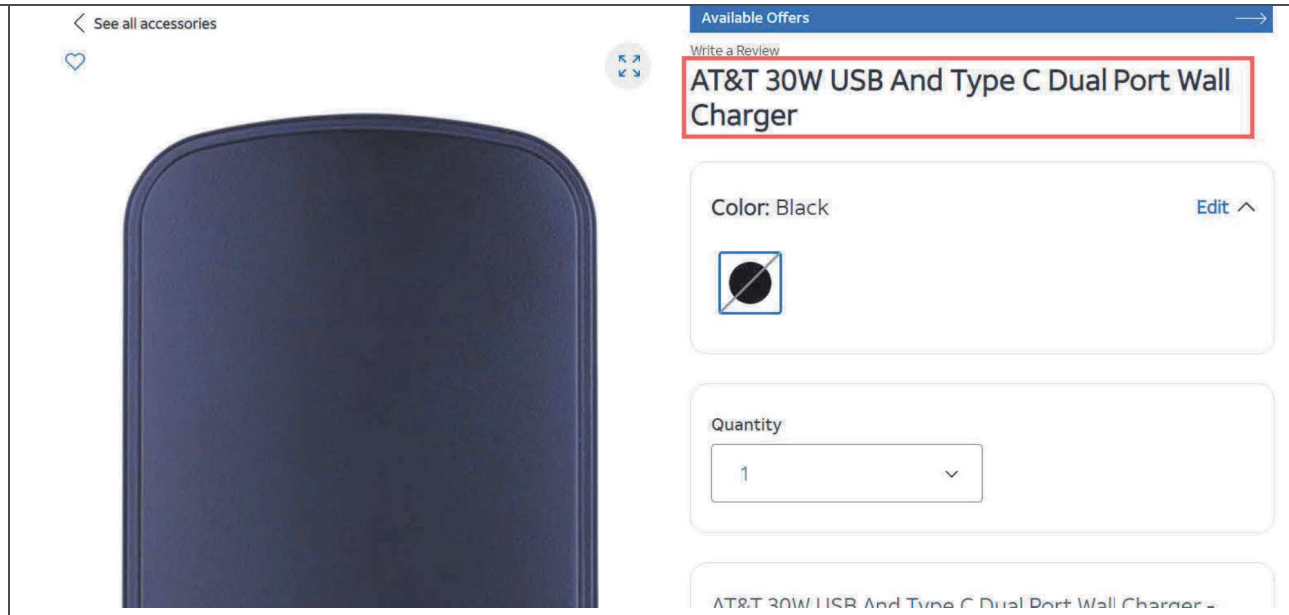

https://www.att.com/buy/accessories/Chargers/att-30w-usb-and-type-c-dual-port-wall-charger-black.html

EXHIBIT 2

	Overview Portable, lightweight wall charger delivers a powerful 30W charge to both a USB-A and USB-C charging port at once. AT&T's fast charge technology turns this wall charger into a safe and rapid charging hub. Charges compatible devices up to 70% faster than standard wall chargers and can get your device up to 50% charged in 30 minutes or less. Discrete LED indicator turns blue when fully charged. Power Delivery Output (USB-C): 5V/3A, 9V2A, 12V/1.5A. Standard USB-A Output: 5V/2.4A. USB Power Delivery 3.0 PPS Certified. Use with AT&T cables for best experience. Key Features and specs: Charges up to 70% faster than standard chargers Charges up to 50% in 30 minutes Charges 2 devices simultaneously with Single USB-C port + Single USB-A port Foldable AC prongs Total output: 30W rapidly charges most portable devices Power Delivery Output (USB-C): 5V/3A, 9V2A, 12V/1.5A USB Power Delivery 3.0 PPS Certified Standard USB-A Output: 5V/2.4A https://www.att.com/buy/accessories/Chargers/att-30w-usb-and-type-c-dual-port-wall-charger-black.html

EXHIBIT 2

Compatible Products

Alcatel

	AXEL		

Apple

iPhone SE 3rd Gen (2022)	iPhone 12 Pro Max	iPad Air 5th Gen (2022)	Watch Nike SE 40mm
iPhone 13 mini	iPhone 12 Pro	iPad Air (2020)	iPad 8th generation
iPhone 13 Pro Max	iPhone 12	iPad 9th Generation (2021)	Watch Series 6 44mm
iPhone 13 Pro	iPad mini (2021)	Watch SE 44mm	Watch Series 6 40mm
iPhone 13	iPad Pro 12.9-inch (2021)	Watch SE 40mm	Watch Nike Series 6 44mm
iPhone 12 mini	iPad Pro 11-inch (2021)	Watch Nike SE 44mm	Watch Nike Series 6 40mm

AT&T

RADIANT Max 5G	Fusion 5G	Unite Express 2	RADIANT Max
Global Modem USB800	Calypso 2	Turbo Hotspot 2	AT&T Fusion Z
	Calypso		

https://www.att.com/buy/accessories/Chargers/att-30w-usb-and-type-c-dual-port-wall-charger-black.html

EXHIBIT 2

	(3) EUT Photo 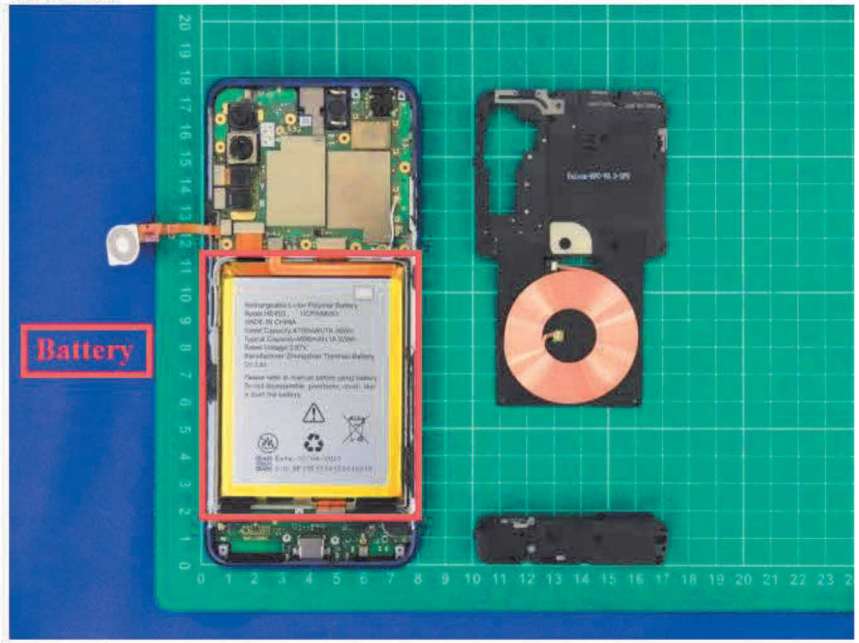 *Source: AT&T Radiant Max 5G internal image*
an electronic circuitry configured to be powered by the battery; and	The accused product comprises an electronic circuitry (e.g., circuitry for camera, display, etc.) configured to be powered by the battery. The accused product comprises circuitries for camera, display, etc. which are powered by the battery of the accused product.

EXHIBIT 2

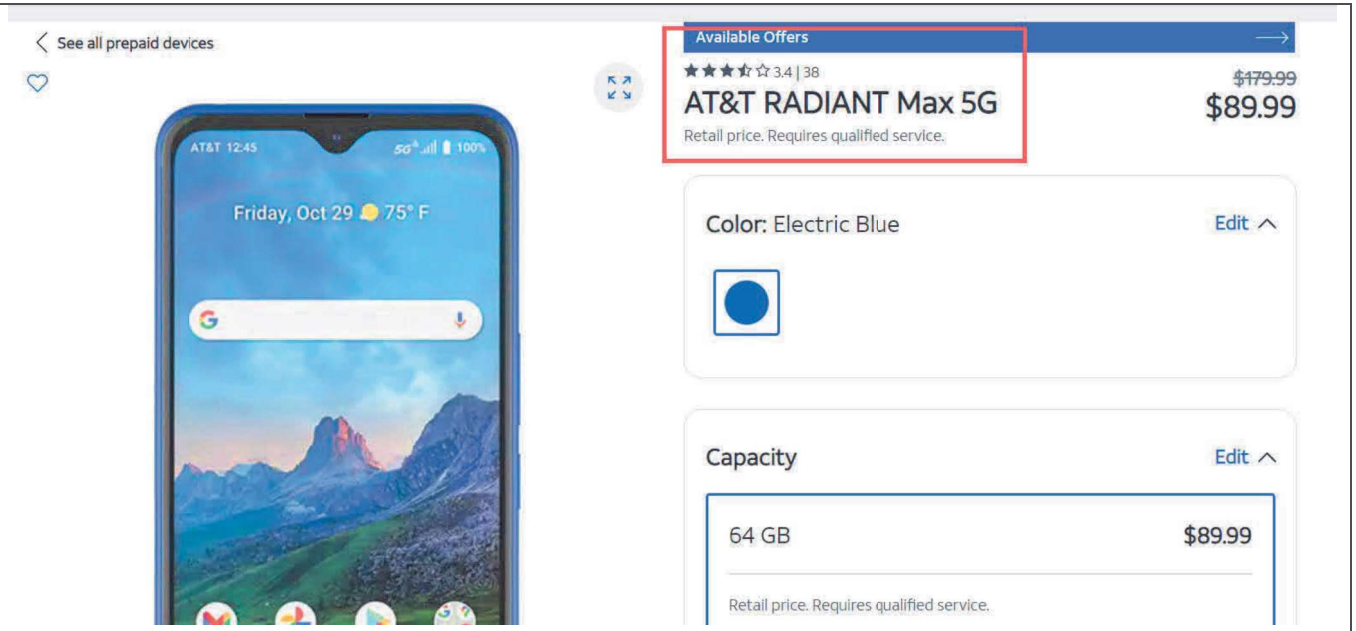

https://www.att.com/buy/prepaid-phones/att-radiant-max-5g-64gb-electric-blue-prepaid.html

EXHIBIT 2

	 https://www.att.com/buy/prepaid-phones/att-radiant-max-5g-64gb-electric-blue-prepaid.html

EXHIBIT 2

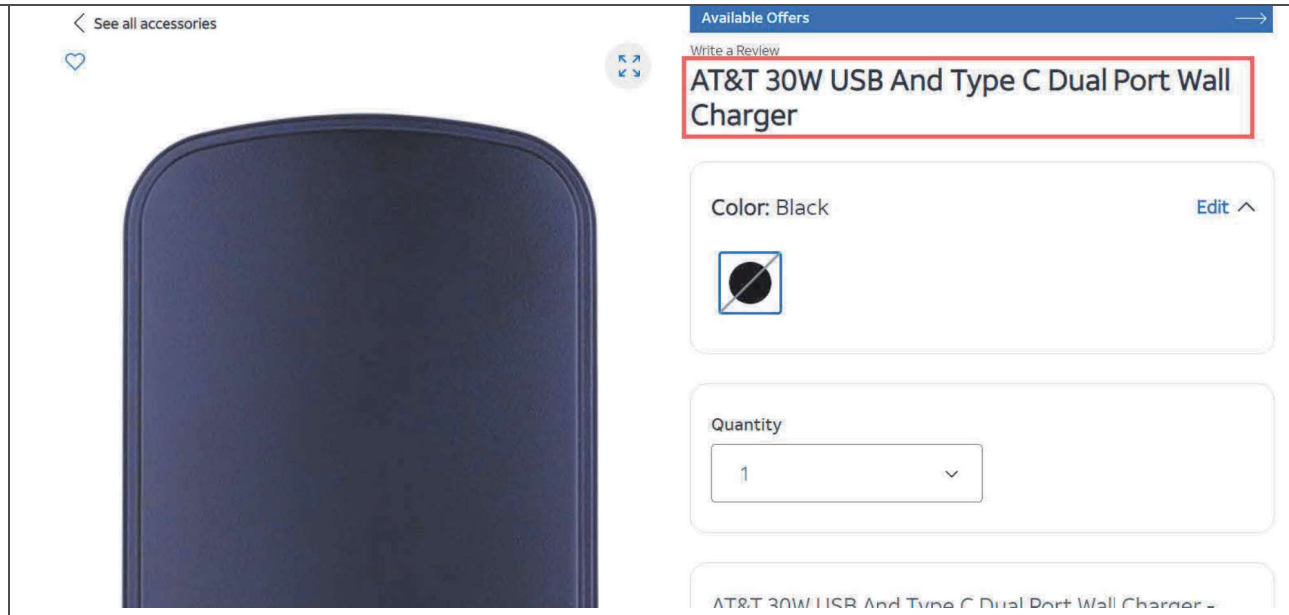

https://www.att.com/buy/accessories/Chargers/att-30w-usb-and-type-c-dual-port-wall-charger-black.html

EXHIBIT 2

	 https://www.att.com/buy/accessories/Chargers/att-30w-usb-and-type-c-dual-port-wall-charger-black.html
a converter configured to receive energy from any of a plurality of authorized chargers, and generate power from the energy for charging the battery using the power;	The accused product comprises a converter (e.g., converting power from USB to battery charging) configured to receive energy (e.g., power from USB) from any of a plurality of authorized chargers (e.g., a plurality of chargers compliant with USB PD 2.0 and USB PD 3.0 standards), and generate power from the energy for charging the battery (e.g., battery of the accused product) using the power. The accused product charges its battery in compliance with USB PD 3.0 charging standard. The USB PD 3.0 standard provides the same output power support as the USB PD 2.0 and in addition provides programmable power supply (PPS) and is backward compatible with USB PD 2.0 for charging the battery.

EXHIBIT 2

Battery

Battery capacity	4,750mAh (non-removable)
Talk time (hours)	Up to 23.05
Standby time (days)	Up to 18
Audio playback time (hours)	Speaker: Up to 24 Headset: Up to 30
Wireless charging capable	✓
Fast charging capable	✓
Time to charge to 50%	Up to 60 minutes
Time to charge to 100%	Up to 160 minutes

https://www.att.com/buy/prepaid-phones/att-radiant-max-5g-64gb-electric-blue-prepaid.html

EXHIBIT 2

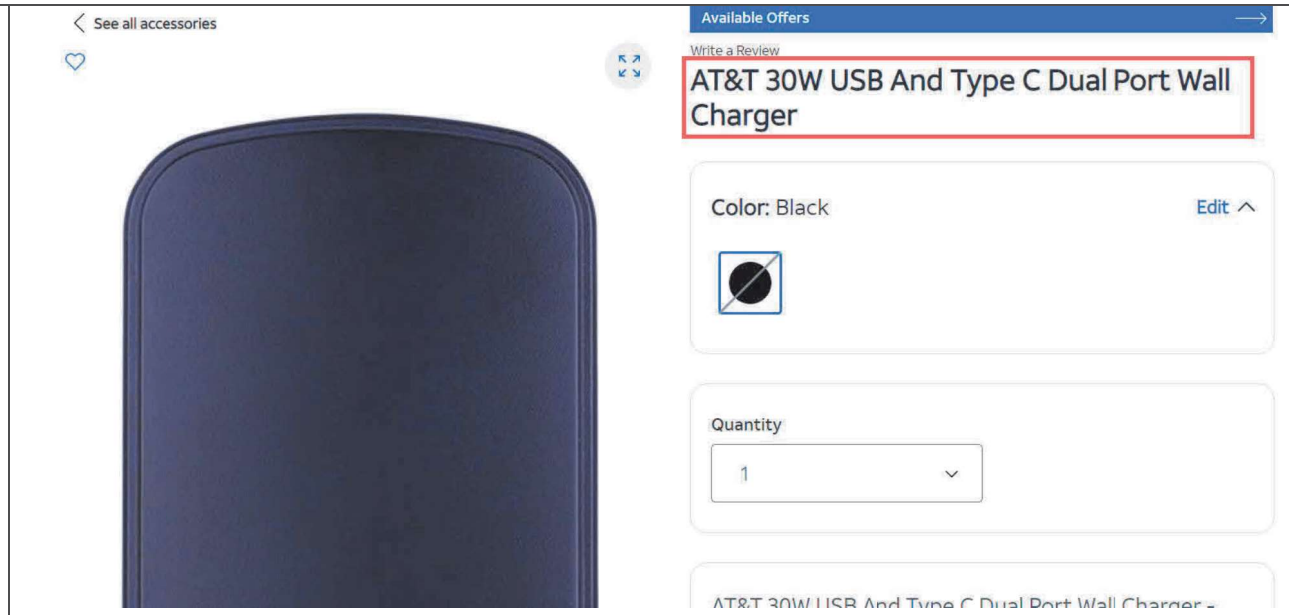

https://www.att.com/buy/accessories/Chargers/att-30w-usb-and-type-c-dual-port-wall-charger-black.html

EXHIBIT 2

Compatible Products

Alcatel

	AXEL		

Apple

iPhone SE 3rd Gen (2022)	iPhone 12 Pro Max	iPad Air 5th Gen (2022)	Watch Nike SE 40mm
iPhone 13 mini	iPhone 12 Pro	iPad Air (2020)	iPad 8th generation
iPhone 13 Pro Max	iPhone 12	iPad 9th Generation (2021)	Watch Series 6 44mm
iPhone 13 Pro	iPad mini (2021)	Watch SE 44mm	Watch Series 6 40mm
iPhone 13	iPad Pro 12.9-inch (2021)	Watch SE 40mm	Watch Nike Series 6 44mm
iPhone 12 mini	iPad Pro 11-inch (2021)	Watch Nike SE 44mm	Watch Nike Series 6 40mm

AT&T

RADIANT Max 5G	Fusion 5G	Unite Express 2	RADIANT Max
Global Modem USB800	Calypso 2	Turbo Hotspot 2	AT&T Fusion Z
	Calypso		

https://www.att.com/buy/accessories/Chargers/att-30w-usb-and-type-c-dual-port-wall-charger-black.html

EXHIBIT 2

	Overview Portable, lightweight wall charger delivers a powerful 30W charge to both a USB-A and USB-C charging port at once. AT&T's fast charge technology turns this wall charger into a safe and rapid charging hub. Charges compatible devices up to 70% faster than standard wall chargers and can get your device up to 50% charged in 30 minutes or less. Discrete LED indicator turns blue when fully charged. Power Delivery Output (USB-C): 5V/3A, 9V2A, 12V/1.5A. Standard USB-A Output: 5V/2.4A. USB Power Delivery 3.0 PPS Certified. Use with AT&T cables for best experience. Key Features and specs: Charges up to 70% faster than standard chargers Charges up to 50% in 30 minutes Charges 2 devices simultaneously with Single USB-C port + Single USB-A port Foldable AC prongs Total output: 30W rapidly charges most portable devices Power Delivery Output (USB-C): 5V/3A, 9V2A, 12V/1.5A USB Power Delivery 3.0 PPS Certified Standard USB-A Output: 5V/2.4A https://www.att.com/buy/accessories/Chargers/att-30w-usb-and-type-c-dual-port-wall-charger-black.html

EXHIBIT 2

Version	USB BC 1.2	USB PD 1.0	USB PD 2.0	USB PD 3.0	USB PD 3.0 PPS	USB PD 3.1
Release date	2010	2012	2014	2015	2017	2021
USB type	USB Type-A	USB Type-A, USB Type-B	USB Type-C	USB Type-C	USB Type-C	USB Type-C
Output support	5V1, 5A		5V 3A, 9V 3A, 15V 3A, 20V 2.25A, 20V 3A, 20V 5A	5V 3A, 9V 3A, 15V 3A, 20V 2.25A, 20V 3A, 20V 5A	5V 3A, 9V 3A, 15V 3A, 20V 2.25A, 20V 3A, 20V 5A PPS: 3.3V-5.9V 3A, 3.3-11V 3A, 3.3-16V 3A, 3.3-21V 3A, 3.3-21V 5A	5V 3A, 9V 3A, 15V 3A, 20V 3A, 20V 5A PPS: 3.3V-5.9V 3A, 3.3-11V 3A, 3.3-16V 3A, 3.3-21V 3A, 3.3-21V 5A AVS: 15-28V 5A, 15-36V 5A, 15-48V 5A

https://www.thephonetalks.com/usb-pd-2-0-vs-3-0-vs-3-1/

EXHIBIT 2

	  https://www.att.com/buy/accessories/Chargers/att-30w-usb-and-type-c-dual-port-wall-charger-black.html

EXHIBIT 2

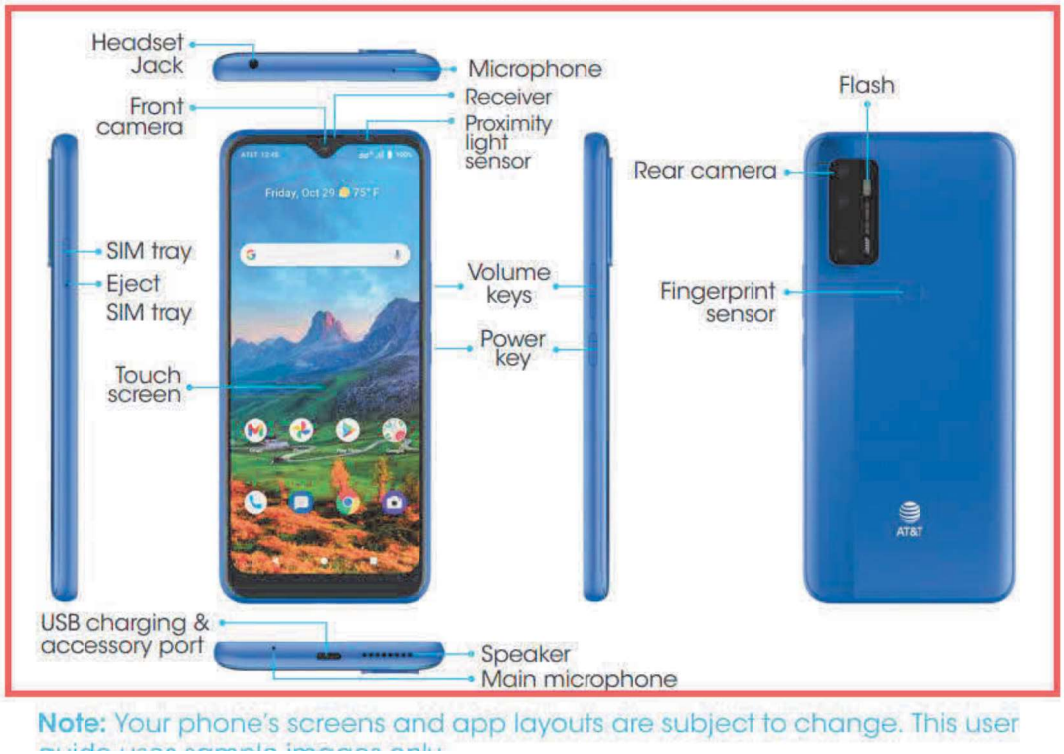

https://www.att.com/idpassets/images/support/device-support/ATT-RADIANTMax5G-EN-UG-INTERACTIVE.pdf

EXHIBIT 2

Battery

Battery capacity	4,750mAh (non-removable)
Talk time (hours)	Up to 23.05
Standby time (days)	Up to 18
Audio playback time (hours)	Speaker: Up to 24 Headset: Up to 30
Wireless charging capable	✓
Fast charging capable	✓
Time to charge to 50%	Up to 60 minutes
Time to charge to 100%	Up to 160 minutes

https://www.att.com/buy/prepaid-phones/att-radiant-max-5g-64gb-electric-blue-prepaid.html

EXHIBIT 2

Overview

Portable, lightweight wall charger delivers a powerful 30W charge to both a USB-A and USB-C charging port at once. AT&T's fast charge technology turns this wall charger into a safe and rapid charging hub. Charges compatible devices up to 70% faster than standard wall chargers and can get your device up to 50% charged in 30 minutes or less. Discrete LED indicator turns blue when fully charged. Power Delivery Output (USB-C): 5V/3A, 9V2A, 12V/1.5A. Standard USB-A Output: 5V/2.4A. USB Power Delivery 3.0 PPS Certified. Use with AT&T cables for best experience.

Key Features and specs:
Charges up to 70% faster than standard chargers
Charges up to 50% in 30 minutes
Charges 2 devices simultaneously with Single USB-C port + Single USB-A port
Foldable AC prongs
Total output: 30W rapidly charges most portable devices
Power Delivery Output (USB-C): 5V/3A, 9V2A, 12V/1.5A
USB Power Delivery 3.0 PPS Certified
Standard USB-A Output: 5V/2.4A

https://www.att.com/buy/accessories/Chargers/att-30w-usb-and-type-c-dual-port-wall-charger-black.html

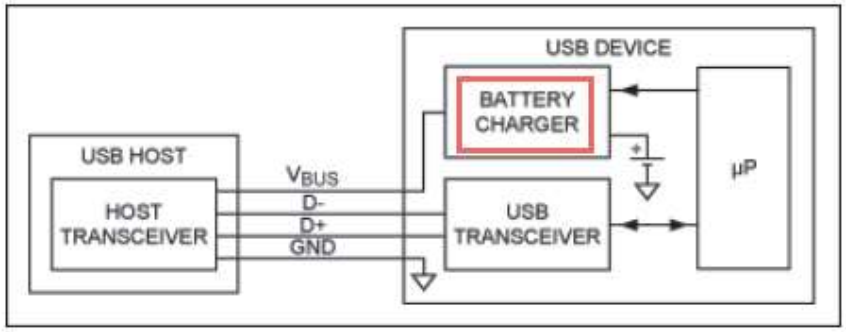

EXHIBIT 2

	https://www.electronicproducts.com/the-basics-of-usb-battery-charging-a-survival-guide/# **2.3 Compatibility with Revision 2.0** Revision 3.0 of the USB Power Delivery specification is designed to be fully interoperable with *[USBPD 2.0]* systems using BMC signaling over the *[USB Type-C 2.0]* connector and to be compatible with Revision 2.0 hardware. This specification mandates that all Revision 3.0 systems fully support Revision 2.0 operation. They must discover the supported Revision used by their Port Partner and any connected Cable Plugs and revert to operation using the lowest common Revision number (see Section 6.2.1.1.5). This specification defines Extended Messages containing data of up to 260 bytes (see Section 6.2.1.2). These Messages will be larger than expected by existing PHY HW. To accommodate Revision 2.0 based systems a Chunking mechanism is mandated such that Messages are limited to Revision 2.0 sizes unless it is discovered that both systems support the longer Message lengths. *Source: USB PD 3.0 specification.PDF* The accused product receives energy from a charger (e.g., an authorized charger complying with USB PD 2.0 or USB PD 3.0) which provides messages according to USB PD standards to indicate its charging capabilities and specification revision value. After selection of the common specification revision level and negotiation of power requirements, it generates power for charging the battery from the received energy.

EXHIBIT 2

6.2.1.1.5 Specification Revision

The ***Specification Revision*** field ***Shall*** be one of the following values (except 11b):

- 00b –Revision 1.0
- 01b –Revision 2.0
- 10b – Revision 3.0
- 11b – ***Reserved***, ***Shall Not*** be used

To ensure interoperability with existing USBPD Products, USBPD Products ***Shall*** support every PD Specification Revision starting from ***[USBPD 2.0]*** for ***SOP****; the only exception to this is a VPD which ***Shall Ignore*** Messages sent with PD Specification Revision 2.0 and earlier.

After a physical or logical (USB Type-C® Error Recovery) Attach, a Port discovers the common Specification Revision level between itself and its Port Partner and/or the Cable Plug(s), and uses this Specification Revision level until a Detach, Hard Reset or Error Recovery happens.

After detection of the Specification Revision to be used, all PD communications ***Shall*** comply completely with the relevant revision of the PD specification.

An Attach event or a Hard Reset ***Shall*** cause the detection of the applicable Specification Revision to be performed for both Ports and Cable Plugs according to the rules stated below:

When the Source Port first communicates with the Sink Port the ***Specification Revision*** field ***Shall*** be used as described by the following steps:

1. The Source Port sends a ***Source_Capabilities*** Message to the Sink Port setting the ***Specification Revision*** field to the highest Revision of the Power Delivery Specification the Source Port supports.
2. The Sink Port responds with a ***Request*** Message setting the ***Specification Revision*** field to the highest Revision of the Power Delivery Specification the Sink Port supports that is equal to or lower than the ***Specification Revision*** received from the Source Port.
3. The Source and Sink Ports ***Shall*** use the ***Specification Revision*** in the ***Request*** Message from the Sink in step 2 in all subsequent communications until a Detach, Hard Reset, or Error Recovery happens.

EXHIBIT 2

Table 6-1 Message Header

Bit(s)	Start of Packet	Field Name	Reference
15	SOP*	*Extended*	Section 6.2.1.1.1
14...12	SOP*	*Number of Data Objects*	Section 6.2.1.1.2
11...9	SOP*	*MessageID*	Section 6.2.1.1.3
8	SOP only	*Port Power Role*	Section 6.2.1.1.4
	SOP'/SOP''	*Cable Plug*	Section 6.2.1.1.7
7...6	SOP*	*Specification Revision*	Section 6.2.1.1.5
5	SOP only	*Port Data Role*	Section 6.2.1.1.6
	SOP'/SOP''	***Reserved***	Section 1.4.2.10
4...0	SOP*	*Message Type*	Section 6.2.1.1.8

2.6.2 Sink Operation

- At Attach (no PD Connection or Contract):
  - Sink detects Source Attachment through the presence of *vSafe5V*.
  - For a DRP that toggles the Port becomes a Sink Port on Attachment of a Source.
  - Once the Sink detects the presence of *vSafe5V* on V_{BUS} it waits for a *Source_Capabilities* Message indicating the presence of a PD capable Source.
  - If the Sink does not receive a *Source_Capabilities* Message within *tTypeCSinkWaitCap* then it issues *Hard Reset* Signaling in order to cause the Source Port to send a *Source_Capabilities* Message if the Source Port is PD capable.
  - The Sink does not generate SOP' or SOP'' Packets, is not required to detect SOP' or SOP'' Packets and does not recognize them.
- Establishing PD Connection (no PD Connection or Contract):
  - The Sink receives a *Source_Capabilities* Message and responds with a *GoodCRC* Message.
  - The Sink does not generate SOP' or SOP'' Packets, is not required to detect SOP' or SOP'' Packets and ***Discards*** them.

EXHIBIT 2

6.4.1.2 Source_Capabilities Message

A Source Port ***Shall*** report its capabilities in a series of 32-bit Power Data Objects (see Table 6-7) as part of a ***Source_Capabilities*** Message (see Figure 6-12). Power Data Objects are used to convey a Source Port's capabilities to provide power including Dual-Role Power ports presently operating as a Sink.

Each Power Data Object ***Shall*** describe a specific Source capability such as a Battery (e.g. 2.8-4.1V) or a fixed power supply (e.g. 12V) at a maximum allowable current. The ***Number of Data Objects*** field in the Message Header ***Shall*** define the number of Power Data Objects that follow the Message Header in a Data Message. All Sources ***Shall*** minimally offer one Power Data Object that reports ***vSafe5V***. A Source ***Shall Not*** offer multiple Power Data Objects of the same type (fixed, variable, Battery) and the same voltage but ***Shall*** instead offer one Power Data Object with the highest available current for that Source capability and voltage.

Sinks with Accessory Support do not source V_{BUS} (see ***[USB Type-C 2.0]***). Sinks with Accessory Support are still considered Sources when sourcing V_{CONN} to an Accessory even though V_{BUS} is not applied; in this case they ***Shall*** advertise ***vSafe5V*** with the Maximum Current set to 0mA in the first Power Data Object. The main purpose of this is to enable the Sink with Accessory Support to get into the ***PE_SRC_Ready*** State in order to enter an Alternate Mode.

A Sink ***Shall*** evaluate every ***Source_Capabilities*** Message it receives and ***Shall*** respond with a ***Request*** Message. If its power consumption exceeds the Source's capabilities it ***Shall*** re-negotiate so as not to exceed the Source's most recently advertised capabilities.

A Sink that evaluates the ***Source_Capabilities*** Message it receives and identifies a PPS APDO ***Shall*** periodically re-request the PPS APDO at least every ***tPPSRequest*** until either:

EXHIBIT 2

6.4.1 Capabilities Message

A Capabilities Message (*Source_Capabilities* Message or *Sink_Capabilities* Message) ***Shall*** have at least one Power Data Object for *vSafe5V*. The Capabilities Message ***Shall*** also contain the sending Port's information followed by up to 6 additional Power Data Objects. Power Data Objects in a Capabilities Message ***Shall*** be sent in the following order:

1. The *vSafe5V* Fixed Supply Object ***Shall*** always be the first object.
2. The remaining Fixed Supply Objects, if present, ***Shall*** be sent in voltage order; lowest to highest.
3. The Battery Supply Objects, if present ***Shall*** be sent in Minimum Voltage order; lowest to highest.
4. The Variable Supply (non-Battery) Objects, if present, ***Shall*** be sent in Minimum Voltage order; lowest to highest.
5. The Programmable Power Supply Objects, if present, ***Shall*** be sent in Maximum Voltage order, lowest to highest.

Figure 6-12 Example Capabilities Message with 2 Power Data Objects

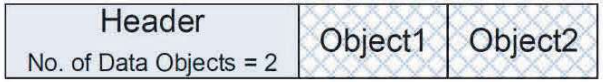

In Figure 6-12, the *Number of Data Objects* field is 2: *vSafe5V* plus one other voltage.

Power Data Objects (PDO) and Augmented Power Data Objects (APDO) are identified by the Message Header's Type field. They are used to form *Source_Capabilities* Messages and *Sink_Capabilities* Messages.

EXHIBIT 2

<table>
<tr>
<td></td>
<td>
Sources expose their power capabilities by sending a Source_Capabilities Message. Sinks expose their power requirements by sending a Sink_Capabilities Message. Both are composed of a number of 32-bit Power Data Objects (see Table 6-7).

Table 6-7 Power Data Object
<table>
<tr><th>Bit(s)</th><th colspan="2">Description</th></tr>
<tr><td>B31...30</td><td>Value</td><td>Parameter</td></tr>
<tr><td></td><td>00b</td><td>Fixed supply (Vmin = Vmax)</td></tr>
<tr><td></td><td>01b</td><td>Battery</td></tr>
<tr><td></td><td>10b</td><td>Variable Supply (non-Battery)</td></tr>
<tr><td></td><td>11b</td><td>Augmented Power Data Object (APDO)</td></tr>
<tr><td>B29...0</td><td colspan="2">Specific Power Capabilities are described by the PDOs in the following sections.</td></tr>
</table>
The Augmented Power Data Object (APDO) is defined to allow support for more than the four PDO types by extending the Power Data Object field from 2 to 4 bits when the B31...B30 are 11b. The generic APDO structure is shown in Table 6-8.

Table 6-8 Augmented Power Data Object
<table>
<tr><th>Bit(s)</th><th>Description</th></tr>
<tr><td>B31...30</td><td>11b – Augmented Power Datat Object (APDO)</td></tr>
<tr><td>B29...28</td><td>00b – Programmable Power Supply
01b-11b - Reserved</td></tr>
<tr><td>B27...0</td><td>Specific Power Capabilities are described by the APDOs in the following sections.</td></tr>
</table>

Source: USB PD 3.0 specification.PDF
</td>
</tr>
<tr>
<td>the battery-operated device configured to:
receive a charger identification from a charger;

Excerpt from US'246 [13:5-15]:
C. Power Transfer only from Authorized Masters</td>
<td>The accused product is the battery-operated device which is configured to receive a charger identification (e.g., information related to capabilities of a charger as well as specification revision value supported by the charger as indicated in the Source_Capabilities Message) from a charger.</td>
</tr>
</table>

EXHIBIT 2

A slave prevents non-authorized masters from trying to charge it or power it up (or networked servers from commanding masters to charge it or power it up) in some embodiments. Slaves store ***identifying information about masters (or networked servers) that are authorized to charge them. The stored information about authorized masters or networked servers includes one or more of the following*** *information about the masters: the masters' media access control address (MAC ID), network IP address, name, serial number, product name and manufacturer,* ***capabilities****, etc.*	**Battery** Battery capacity: 4,750mAh (non-removable) Talk time (hours): Up to 23.05 Standby time (days): Up to 18 Audio playback time (hours): Speaker: Up to 24 Headset: Up to 30 Wireless charging capable: ✓ Fast charging capable: ✓ Time to charge to 50%: Up to 60 minutes Time to charge to 100%: Up to 160 minutes https://www.att.com/buy/prepaid-phones/att-radiant-max-5g-64gb-electric-blue-prepaid.html

EXHIBIT 2



https://www.att.com/buy/accessories/Chargers/att-30w-usb-and-type-c-dual-port-wall-charger-black.html

EXHIBIT 2

Compatible Products

Alcatel

	AXEL		

Apple

iPhone SE 3rd Gen (2022)	iPhone 12 Pro Max	iPad Air 5th Gen (2022)	Watch Nike SE 40mm
iPhone 13 mini	iPhone 12 Pro	iPad Air (2020)	iPad 8th generation
iPhone 13 Pro Max	iPhone 12	iPad 9th Generation (2021)	Watch Series 6 44mm
iPhone 13 Pro	iPad mini (2021)	Watch SE 44mm	Watch Series 6 40mm
iPhone 13	iPad Pro 12.9-inch (2021)	Watch SE 40mm	Watch Nike Series 6 44mm
iPhone 12 mini	iPad Pro 11-inch (2021)	Watch Nike SE 44mm	Watch Nike Series 6 40mm

AT&T

RADIANT Max 5G	Fusion 5G	Unite Express 2	RADIANT Max
Global Modem USB800	Calypso 2	Turbo Hotspot 2	AT&T Fusion Z
	Calypso		

https://www.att.com/buy/accessories/Chargers/att-30w-usb-and-type-c-dual-port-wall-charger-black.html

EXHIBIT 2

Overview

Portable, lightweight wall charger delivers a powerful 30W charge to both a USB-A and USB-C charging port at once. AT&T's fast charge technology turns this wall charger into a safe and rapid charging hub. Charges compatible devices up to 70% faster than standard wall chargers and can get your device up to 50% charged in 30 minutes or less. Discrete LED indicator turns blue when fully charged. Power Delivery Output (USB-C): 5V/3A, 9V2A, 12V/1.5A. Standard USB-A Output: 5V/2.4A. USB Power Delivery 3.0 PPS Certified. Use with AT&T cables for best experience.

Key Features and specs:
Charges up to 70% faster than standard chargers
Charges up to 50% in 30 minutes
Charges 2 devices simultaneously with Single USB-C port + Single USB-A port
Foldable AC prongs
Total output: 30W rapidly charges most portable devices
Power Delivery Output (USB-C): 5V/3A, 9V2A, 12V/1.5A
USB Power Delivery 3.0 PPS Certified
Standard USB-A Output: 5V/2.4A

https://www.att.com/buy/accessories/Chargers/att-30w-usb-and-type-c-dual-port-wall-charger-black.html

An Attach event or a Hard Reset ***Shall*** cause the detection of the applicable Specification Revision to be performed for both Ports and Cable Plugs according to the rules stated below:

When the Source Port first communicates with the Sink Port the ***Specification Revision*** field ***Shall*** be used as described by the following steps:

1. The Source Port sends a ***Source Capabilities*** Message to the Sink Port setting the ***Specification Revision*** field to the highest Revision of the Power Delivery Specification the Source Port supports.
2. The Sink Port responds with a ***Request*** Message setting the ***Specification Revision*** field to the highest Revision of the Power Delivery Specification the Sink Port supports that is equal to or lower than the ***Specification Revision*** received from the Source Port.
3. The Source and Sink Ports ***Shall*** use the ***Specification Revision*** in the ***Request*** Message from the Sink in step 2 in all subsequent communications until a Detach, Hard Reset, or Error Recovery happens.

EXHIBIT 2

Table 6-1 Message Header

Bit(s)	Start of Packet	Field Name	Reference
15	SOP*	*Extended*	Section 6.2.1.1.1
14...12	SOP*	*Number of Data Objects*	Section 6.2.1.1.2
11...9	SOP*	*MessageID*	Section 6.2.1.1.3
8	SOP only	*Port Power Role*	Section 6.2.1.1.4
	SOP'/SOP''	*Cable Plug*	Section 6.2.1.1.7
7...6	SOP*	*Specification Revision*	Section 6.2.1.1.5
5	SOP only	*Port Data Role*	Section 6.2.1.1.6
	SOP'/SOP''	***Reserved***	Section 1.4.2.10
4...0	SOP*	*Message Type*	Section 6.2.1.1.8

2.6.2 Sink Operation

- At Attach (no PD Connection or Contract):
  - Sink detects Source Attachment through the presence of *vSafe5V*.
  - For a DRP that toggles the Port becomes a Sink Port on Attachment of a Source.
  - Once the Sink detects the presence of *vSafe5V* on V_{BUS} it waits for a *Source_Capabilities* Message indicating the presence of a PD capable Source.
  - If the Sink does not receive a *Source_Capabilities* Message within *tTypeCSinkWaitCap* then it issues *Hard Reset* Signaling in order to cause the Source Port to send a *Source_Capabilities* Message if the Source Port is PD capable.
  - The Sink does not generate SOP' or SOP'' Packets, is not required to detect SOP' or SOP'' Packets and does not recognize them.
- Establishing PD Connection (no PD Connection or Contract):
  - The Sink receives a *Source_Capabilities* Message and responds with a *GoodCRC* Message.
  - The Sink does not generate SOP' or SOP'' Packets, is not required to detect SOP' or SOP'' Packets and ***Discards*** them.

EXHIBIT 2

6.4.1.2 Source_Capabilities Message

A Source Port ***Shall*** report its capabilities in a series of 32-bit Power Data Objects (see Table 6-7) as part of a ***Source_Capabilities*** Message (see Figure 6-12). Power Data Objects are used to convey a Source Port's capabilities to provide power including Dual-Role Power ports presently operating as a Sink.

Each Power Data Object ***Shall*** describe a specific Source capability such as a Battery (e.g. 2.8-4.1V) or a fixed power supply (e.g. 12V) at a maximum allowable current. The ***Number of Data Objects*** field in the Message Header ***Shall*** define the number of Power Data Objects that follow the Message Header in a Data Message. All Sources ***Shall*** minimally offer one Power Data Object that reports ***vSafe5V***. A Source ***Shall Not*** offer multiple Power Data Objects of the same type (fixed, variable, Battery) and the same voltage but ***Shall*** instead offer one Power Data Object with the highest available current for that Source capability and voltage.

Sinks with Accessory Support do not source V_{BUS} (see ***[USB Type-C 2.0]***). Sinks with Accessory Support are still considered Sources when sourcing V_{CONN} to an Accessory even though V_{BUS} is not applied; in this case they ***Shall*** advertise ***vSafe5V*** with the Maximum Current set to 0mA in the first Power Data Object. The main purpose of this is to enable the Sink with Accessory Support to get into the ***PE_SRC_Ready*** State in order to enter an Alternate Mode.

A Sink ***Shall*** evaluate every ***Source_Capabilities*** Message it receives and ***Shall*** respond with a ***Request*** Message. If its power consumption exceeds the Source's capabilities it ***Shall*** re-negotiate so as not to exceed the Source's most recently advertised capabilities.

A Sink that evaluates the ***Source_Capabilities*** Message it receives and identifies a PPS APDO ***Shall*** periodically re-request the PPS APDO at least every ***tPPSRequest*** until either:

EXHIBIT 2

6.4.1 Capabilities Message

A Capabilities Message (*Source_Capabilities* Message or *Sink_Capabilities* Message) ***Shall*** have at least one Power Data Object for *vSafe5V*. The Capabilities Message ***Shall*** also contain the sending Port's information followed by up to 6 additional Power Data Objects. Power Data Objects in a Capabilities Message ***Shall*** be sent in the following order:

1. The *vSafe5V* Fixed Supply Object ***Shall*** always be the first object.
2. The remaining Fixed Supply Objects, if present, ***Shall*** be sent in voltage order; lowest to highest.
3. The Battery Supply Objects, if present ***Shall*** be sent in Minimum Voltage order; lowest to highest.
4. The Variable Supply (non-Battery) Objects, if present, ***Shall*** be sent in Minimum Voltage order; lowest to highest.
5. The Programmable Power Supply Objects, if present, ***Shall*** be sent in Maximum Voltage order, lowest to highest.

Figure 6-12 Example Capabilities Message with 2 Power Data Objects

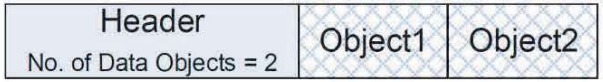

In Figure 6-12, the *Number of Data Objects* field is 2: *vSafe5V* plus one other voltage.

Power Data Objects (PDO) and Augmented Power Data Objects (APDO) are identified by the Message Header's Type field. They are used to form *Source_Capabilities* Messages and *Sink_Capabilities* Messages.

EXHIBIT 2

<table>
<tr>
<td></td>
<td>
Sources expose their power capabilities by sending a Source_Capabilities Message. Sinks expose their power requirements by sending a Sink_Capabilities Message. Both are composed of a number of 32-bit Power Data Objects (see Table 6-7).

Table 6-7 Power Data Object
<table>
<tr><th>Bit(s)</th><th colspan="2">Description</th></tr>
<tr><td>B31...30</td><td>Value</td><td>Parameter</td></tr>
<tr><td></td><td>00b</td><td>Fixed supply (Vmin = Vmax)</td></tr>
<tr><td></td><td>01b</td><td>Battery</td></tr>
<tr><td></td><td>10b</td><td>Variable Supply (non-Battery)</td></tr>
<tr><td></td><td>11b</td><td>Augmented Power Data Object (APDO)</td></tr>
<tr><td>B29...0</td><td colspan="2">Specific Power Capabilities are described by the PDOs in the following sections.</td></tr>
</table>
The Augmented Power Data Object (APDO) is defined to allow support for more than the four PDO types by extending the Power Data Object field from 2 to 4 bits when the B31...B30 are 11b. The generic APDO structure is shown in Table 6-8.

Table 6-8 Augmented Power Data Object
<table>
<tr><th>Bit(s)</th><th>Description</th></tr>
<tr><td>B31...30</td><td>11b – Augmented Power Datat Object (APDO)</td></tr>
<tr><td>B29...28</td><td>00b – Programmable Power Supply
01b-11b - Reserved</td></tr>
<tr><td>B27...0</td><td>Specific Power Capabilities are described by the APDOs in the following sections.</td></tr>
</table>

Source: USB PD 3.0 specification.PDF
</td>
</tr>
<tr>
<td>determine whether the charger identification is in a list of charger identifications belonging to the plurality of authorized chargers;</td>
<td>The accused product is configured to determine whether the charger identification (e.g., specification revision value and capabilities of the charger as indicated in the Source_Capabilities message) is in a list of charger identifications belonging to the plurality of authorized chargers (e.g., specification revision values and source capabilities supported by the accused device).</td>
</tr>
</table>

EXHIBIT 2

An Attach event or a Hard Reset ***Shall*** cause the detection of the applicable Specification Revision to be performed for both Ports and Cable Plugs according to the rules stated below:

When the Source Port first communicates with the Sink Port the ***Specification Revision*** field ***Shall*** be used as described by the following steps:

1. The Source Port sends a ***Source Capabilities*** Message to the Sink Port setting the ***Specification Revision*** field to the highest Revision of the Power Delivery Specification the Source Port supports.
2. The Sink Port responds with a ***Request*** Message setting the ***Specification Revision*** field to the highest Revision of the Power Delivery Specification the Sink Port supports that is equal to or lower than the ***Specification Revision*** received from the Source Port.
3. The Source and Sink Ports ***Shall*** use the ***Specification Revision*** in the ***Request*** Message from the Sink in step 2 in all subsequent communications until a Detach, Hard Reset, or Error Recovery happens.

6.2.1.1.5 Specification Revision

The ***Specification Revision*** field ***Shall*** be one of the following values (except 11b):

- 00b –Revision 1.0
- 01b –Revision 2.0
- 10b – Revision 3.0
- 11b – ***Reserved***, ***Shall Not*** be used

To ensure interoperability with existing USBPD Products, USBPD Products ***Shall*** support every PD Specification Revision starting from ***[USBPD 2.0]*** for ***SOP****; the only exception to this is a VPD which ***Shall Ignore*** Messages sent with PD Specification Revision 2.0 and earlier.

EXHIBIT 2

	6.4.1.3 Sink Capabilities Message A Sink Port ***Shall*** report power levels it is able to operate at in a series of 32-bit Power Data Objects (see Table 6-7). These are returned as part of a ***Sink_Capabilities*** Message in response to a ***Get_Sink_Cap*** Message (see Figure 6-12). This is similar to that used for Source Port capabilities with equivalent Power Data Objects for Fixed, Variable and Battery Supplies as defined in this section. Power Data Objects are used to convey the Sink Port's operational power requirements including Dual-Role Power Ports presently operating as a Source. Each Power Data Object ***Shall*** describe a specific Sink operational power level, such as a Battery (e.g. 2.8-4.1V) or a fixed power supply (e.g. 12V). The ***Number of Data Objects*** field in the Message Header ***Shall*** define the number of Power Data Objects that follow the Message Header in a Data Message. All Sinks ***Shall*** minimally offer one Power Data Object with a power level at which the Sink can operate. A Sink ***Shall Not*** offer multiple Power Data Objects of the same type (fixed, variable, Battery) and the same voltage but ***Shall*** instead offer one Power Data Object with the highest available current for that Sink capability and voltage. All Sinks ***Shall*** include one Power Data Object that reports ***vSafe5V*** even if they require additional power to operate fully. In the case where additional power is required for full operation the Higher Capability bit ***Shall*** be set.

EXHIBIT 2

2.6.2 Sink Operation

- At Attach (no PD Connection or Contract):
  - Sink detects Source Attachment through the presence of ***vSafe5V***.
  - For a DRP that toggles the Port becomes a Sink Port on Attachment of a Source.
  - Once the Sink detects the presence of ***vSafe5V*** on V_{BUS} it waits for a ***Source_Capabilities*** Message indicating the presence of a PD capable Source.
  - If the Sink does not receive a ***Source_Capabilities*** Message within ***tTypeCSinkWaitCap*** then it issues ***Hard Reset*** Signaling in order to cause the Source Port to send a ***Source_Capabilities*** Message if the Source Port is PD capable.
  - The Sink does not generate SOP' or SOP'' Packets, is not required to detect SOP' or SOP'' Packets and does not recognize them.
- Establishing PD Connection (no PD Connection or Contract):
  - The Sink receives a ***Source_Capabilities*** Message and responds with a ***GoodCRC*** Message.
  - The Sink does not generate SOP' or SOP'' Packets, is not required to detect SOP' or SOP'' Packets and ***Discards*** them.
- Establishing Explicit Contract (PD Connection but no Explicit Contract or Implicit Contract after a Power Role Swap or Fast Role Swap):
  - The Sink receives a ***Source_Capabilities*** Message from the Source and responds with a ***Request*** Message. If this is a ***Valid*** request the Sink receives an ***Accept*** Message followed by a ***PS_RDY*** Message when the Source's power supply is ready to source power at the agreed level. At this point the Source and Sink have entered into an Explicit Contract:
    - The Sink Port may request one of the capabilities offered by the Source, even if this is the ***vSafe5V*** output offered by ***[USB 2.0]***, ***[USB 3.2]***, ***[USB Type-C 2.0]*** or ***[USBBC 1.2]***, in order to enable future power negotiation:
      - A Sink not requesting any capability with a ***Request*** Message results in an error.
    - A Sink unable to fully operate at the offered capabilities requests the default capability but indicates that it would prefer another power level and provide a physical indication of the failure to the end user (e.g. using an LED).
    - A Sink does not generate SOP' or SOP'' Packets, is not required to detect SOP' or SOP'' Packets and ***Discards*** them.

Source: USB PD 3.0 specification.PDF

EXHIBIT 2

	The accused product receives energy from a charger (e.g., authorized charger) which provides source capabilities and supported specification revision value. In case the charger doesn't provide a supported specification revision value, i.e., if the charger complies with USB PD 1.0, or the charger doesn't provide source capabilities requested by the accused device, the accused product will not consider the charger as an authorized charger and communication gets fail. The communication between charger and the accused product comes to a USB default operation at zero volts. 6.2.1.1.5 Specification Revision The *Specification Revision* field ***Shall*** be one of the following values (except 11b): • 00b –Revision 1.0 • 01b –Revision 2.0 • 10b – Revision 3.0 • 11b – ***Reserved, Shall Not*** be used To ensure interoperability with existing USBPD Products, USBPD Products ***Shall*** support every PD Specification Revision starting from *[USBPD 2.0]* for *SOP**; the only exception to this is a VPD which ***Shall Ignore*** Messages sent with PD Specification Revision 2.0 and earlier.

EXHIBIT 2

2.6.2 Sink Operation

- At Attach (no PD Connection or Contract):
  - Sink detects Source Attachment through the presence of ***vSafe5V***.
  - For a DRP that toggles the Port becomes a Sink Port on Attachment of a Source.
  - Once the Sink detects the presence of ***vSafe5V*** on V_{BUS} it waits for a ***Source_Capabilities*** Message indicating the presence of a PD capable Source.
  - If the Sink does not receive a ***Source_Capabilities*** Message within ***tTypeCSinkWaitCap*** then it issues ***Hard Reset*** Signaling in order to cause the Source Port to send a ***Source_Capabilities*** Message if the Source Port is PD capable.
  - The Sink does not generate SOP' or SOP'' Packets, is not required to detect SOP' or SOP'' Packets and does not recognize them.
- Establishing PD Connection (no PD Connection or Contract):
  - The Sink receives a ***Source_Capabilities*** Message and responds with a ***GoodCRC*** Message.
  - The Sink does not generate SOP' or SOP'' Packets, is not required to detect SOP' or SOP'' Packets and ***Discards*** them.
- Establishing Explicit Contract (PD Connection but no Explicit Contract or Implicit Contract after a Power Role Swap or Fast Role Swap):
  - The Sink receives a ***Source_Capabilities*** Message from the Source and responds with a ***Request*** Message. If this is a ***Valid*** request the Sink receives an ***Accept*** Message followed by a ***PS_RDY*** Message when the Source's power supply is ready to source power at the agreed level. At this point the Source and Sink have entered into an Explicit Contract:
    - The Sink Port may request one of the capabilities offered by the Source, even if this is the ***vSafe5V*** output offered by ***[USB 2.0]***, ***[USB 3.2]***, ***[USB Type-C 2.0]*** or ***[USBBC 1.2]***, in order to enable future power negotiation:
      - A Sink not requesting any capability with a ***Request*** Message results in an error.
    - A Sink unable to fully operate at the offered capabilities requests the default capability but indicates that it would prefer another power level and provide a physical indication of the failure to the end user (e.g. using an LED).
    - A Sink does not generate SOP' or SOP'' Packets, is not required to detect SOP' or SOP'' Packets and ***Discards*** them.

EXHIBIT 2

8.3.3.2.8 PE_SRC_Capability_Response State

The Policy Engine ***Shall*** enter the ***PE_SRC_Capability_Response*** state if there is a Request received from the Sink that cannot be met based on the present capabilities. When the present Contract is not within the present capabilities it is regarded as ***Invalid*** and a Hard Reset will be triggered.

7.1.5 Response to Hard Resets

Hard Reset Signaling indicates a communication failure has occurred and the Source ***Shall*** stop driving VCONN, ***Shall*** remove Rp from the VCONN pin and ***Shall*** drive VBUS to ***vSafe0V*** as shown in Figure 7-10. The USB connection ***May*** reset during a Hard Reset since the VBUS voltage will be less than ***vSafe5V*** for an extended period of time. After establishing the ***vSafe0V*** voltage condition on VBUS, the Source ***Shall*** wait ***tSrcRecover*** before re-applying VCONN and restoring VBUS to ***vSafe5V***. A Source ***Shall*** conform to the VCONN timing as specified in ***[USB Type-C 2.0]***.

Device operation during and after a Hard Reset is defined as follows:

- Self-powered devices ***Should Not*** disconnect from USB during a Hard Reset (see Section 9.1.2).
- Self-powered devices operating at more than ***vSafe5V*** ***May Not*** maintain full functionality after a ***Hard Reset***.
- Bus powered devices will disconnect from USB during a Hard Reset due to the loss of their power source.

When a Hard Reset occurs the Source ***Shall*** stop driving VCONN, ***Shall*** remove Rp from the VCONN pin and ***Shall*** start to transition the VBUS voltage to ***vSafe0V*** either:

- ***tPSHardReset*** after the last bit of the ***Hard Reset*** Signaling has been received from the Sink or
- ***tPSHardReset*** after the last bit of the ***Hard Reset*** Signaling has been sent by the Source.

The Source ***Shall*** meet both ***tSafe5V*** and ***tSafe0V*** relative to the start of the voltage transition as shown in Figure 7-10.

vSafe0V	Safe operating voltage at "zero volts".

Source: USB PD 3.0 specification.PDF

EXHIBIT 2

in response to determining that the charger identification is in the list of charger identifications: receive the energy from the charger;	The accused product practices, in response to determining that the charger identification (e.g., identification information related to specification revision value as well as capabilities indicated in the Source_Capabilities message sent by the charger) is in a list of charger identifications (e.g., specification revision values and capabilities supported by the accused device), receiving the energy from the charger (e.g., USB PD compliant charger).

EXHIBIT 2

	Battery
	Battery capacity: 4,750mAh (non-removable)
	Talk time (hours): Up to 23.05
	Standby time (days): Up to 18
	Audio playback time (hours): Speaker: Up to 24 Headset: Up to 30
	Wireless charging capable: ✓
	Fast charging capable: ✓
	Time to charge to 50%: Up to 60 minutes
	Time to charge to 100%: Up to 160 minutes
	https://www.att.com/buy/prepaid-phones/att-radiant-max-5g-64gb-electric-blue-prepaid.html

EXHIBIT 2



https://www.att.com/buy/accessories/Chargers/att-30w-usb-and-type-c-dual-port-wall-charger-black.html

EXHIBIT 2

Compatible Products

Alcatel

	AXEL		

Apple

iPhone SE 3rd Gen (2022)	iPhone 12 Pro Max	iPad Air 5th Gen (2022)	Watch Nike SE 40mm
iPhone 13 mini	iPhone 12 Pro	iPad Air (2020)	iPad 8th generation
iPhone 13 Pro Max	iPhone 12	iPad 9th Generation (2021)	Watch Series 6 44mm
iPhone 13 Pro	iPad mini (2021)	Watch SE 44mm	Watch Series 6 40mm
iPhone 13	iPad Pro 12.9-inch (2021)	Watch SE 40mm	Watch Nike Series 6 44mm
iPhone 12 mini	iPad Pro 11-inch (2021)	Watch Nike SE 44mm	Watch Nike Series 6 40mm

AT&T

RADIANT Max 5G	Fusion 5G	Unite Express 2	RADIANT Max
Global Modem USB800	Calypso 2	Turbo Hotspot 2	AT&T Fusion Z
	Calypso		

https://www.att.com/buy/accessories/Chargers/att-30w-usb-and-type-c-dual-port-wall-charger-black.html

EXHIBIT 2

Overview

Portable, lightweight wall charger delivers a powerful 30W charge to both a USB-A and USB-C charging port at once. AT&T's fast charge technology turns this wall charger into a safe and rapid charging hub. Charges compatible devices up to 70% faster than standard wall chargers and can get your device up to 50% charged in 30 minutes or less. Discrete LED indicator turns blue when fully charged. Power Delivery Output (USB-C): 5V/3A, 9V2A, 12V/1.5A. Standard USB-A Output: 5V/2.4A. USB Power Delivery 3.0 PPS Certified. Use with AT&T cables for best experience.

Key Features and specs:
Charges up to 70% faster than standard chargers
Charges up to 50% in 30 minutes
Charges 2 devices simultaneously with Single USB-C port + Single USB-A port
Foldable AC prongs
Total output: 30W rapidly charges most portable devices
Power Delivery Output (USB-C): 5V/3A, 9V2A, 12V/1.5A
USB Power Delivery 3.0 PPS Certified
Standard USB-A Output: 5V/2.4A

https://www.att.com/buy/accessories/Chargers/att-30w-usb-and-type-c-dual-port-wall-charger-black.html

An Attach event or a Hard Reset ***Shall*** cause the detection of the applicable Specification Revision to be performed for both Ports and Cable Plugs according to the rules stated below:

When the Source Port first communicates with the Sink Port the ***Specification Revision*** field ***Shall*** be used as described by the following steps:

1. The Source Port sends a ***Source Capabilities*** Message to the Sink Port setting the ***Specification Revision*** field to the highest Revision of the Power Delivery Specification the Source Port supports.
2. The Sink Port responds with a ***Request*** Message setting the ***Specification Revision*** field to the highest Revision of the Power Delivery Specification the Sink Port supports that is equal to or lower than the ***Specification Revision*** received from the Source Port.
3. The Source and Sink Ports ***Shall*** use the ***Specification Revision*** in the ***Request*** Message from the Sink in step 2 in all subsequent communications until a Detach, Hard Reset, or Error Recovery happens.

EXHIBIT 2

	6.4.1.3 Sink Capabilities Message A Sink Port ***Shall*** report power levels it is able to operate at in a series of 32-bit Power Data Objects (see Table 6-7). These are returned as part of a ***Sink_Capabilities*** Message in response to a ***Get_Sink_Cap*** Message (see Figure 6-12). This is similar to that used for Source Port capabilities with equivalent Power Data Objects for Fixed, Variable and Battery Supplies as defined in this section. Power Data Objects are used to convey the Sink Port's operational power requirements including Dual-Role Power Ports presently operating as a Source. Each Power Data Object ***Shall*** describe a specific Sink operational power level, such as a Battery (e.g. 2.8-4.1V) or a fixed power supply (e.g. 12V). The ***Number of Data Objects*** field in the Message Header ***Shall*** define the number of Power Data Objects that follow the Message Header in a Data Message. All Sinks ***Shall*** minimally offer one Power Data Object with a power level at which the Sink can operate. A Sink ***Shall Not*** offer multiple Power Data Objects of the same type (fixed, variable, Battery) and the same voltage but ***Shall*** instead offer one Power Data Object with the highest available current for that Sink capability and voltage. All Sinks ***Shall*** include one Power Data Object that reports ***vSafe5V*** even if they require additional power to operate fully. In the case where additional power is required for full operation the Higher Capability bit ***Shall*** be set.

EXHIBIT 2

2.6.2 Sink Operation

- At Attach (no PD Connection or Contract):
  - Sink detects Source Attachment through the presence of ***vSafe5V***.
  - For a DRP that toggles the Port becomes a Sink Port on Attachment of a Source.
  - Once the Sink detects the presence of ***vSafe5V*** on V_{BUS} it waits for a ***Source_Capabilities*** Message indicating the presence of a PD capable Source.
  - If the Sink does not receive a ***Source_Capabilities*** Message within ***tTypeCSinkWaitCap*** then it issues ***Hard Reset*** Signaling in order to cause the Source Port to send a ***Source_Capabilities*** Message if the Source Port is PD capable.
  - The Sink does not generate SOP' or SOP'' Packets, is not required to detect SOP' or SOP'' Packets and does not recognize them.
- Establishing PD Connection (no PD Connection or Contract):
  - The Sink receives a ***Source_Capabilities*** Message and responds with a ***GoodCRC*** Message.
  - The Sink does not generate SOP' or SOP'' Packets, is not required to detect SOP' or SOP'' Packets and ***Discards*** them.
- Establishing Explicit Contract (PD Connection but no Explicit Contract or Implicit Contract after a Power Role Swap or Fast Role Swap):
  - The Sink receives a ***Source_Capabilities*** Message from the Source and responds with a ***Request*** Message. If this is a ***Valid*** request the Sink receives an ***Accept*** Message followed by a ***PS_RDY*** Message when the Source's power supply is ready to source power at the agreed level. At this point the Source and Sink have entered into an Explicit Contract:
    - The Sink Port may request one of the capabilities offered by the Source, even if this is the ***vSafe5V*** output offered by ***[USB 2.0]***, ***[USB 3.2]***, ***[USB Type-C 2.0]*** or ***[USBBC 1.2]***, in order to enable future power negotiation:
      - A Sink not requesting any capability with a ***Request*** Message results in an error.
    - A Sink unable to fully operate at the offered capabilities requests the default capability but indicates that it would prefer another power level and provide a physical indication of the failure to the end user (e.g. using an LED).
    - A Sink does not generate SOP' or SOP'' Packets, is not required to detect SOP' or SOP'' Packets and ***Discards*** them.

Source: USB PD 3.0 specification.PDF

EXHIBIT 2

<table>
<tr>
<td>generate, using the converter, the power from the energy received from the charger;</td>
<td>The accused product practices generating, using the converter (e.g., converting power from USB to battery charging), the power from the energy received from the charger (e.g., USB PD charger).

Battery
<table><tr><td>Battery capacity</td><td>4,750mAh (non-removable)</td></tr><tr><td>Talk time (hours)</td><td>Up to 23.05</td></tr><tr><td>Standby time (days)</td><td>Up to 18</td></tr><tr><td>Audio playback time (hours)</td><td>Speaker: Up to 24
Headset: Up to 30</td></tr><tr><td>Wireless charging capable</td><td>✓</td></tr><tr><td>Fast charging capable</td><td>✓</td></tr><tr><td>Time to charge to 50%</td><td>Up to 60 minutes</td></tr><tr><td>Time to charge to 100%</td><td>Up to 160 minutes</td></tr></table>
https://www.att.com/buy/prepaid-phones/att-radiant-max-5g-64gb-electric-blue-prepaid.html</td>
</tr>
</table>

EXHIBIT 2

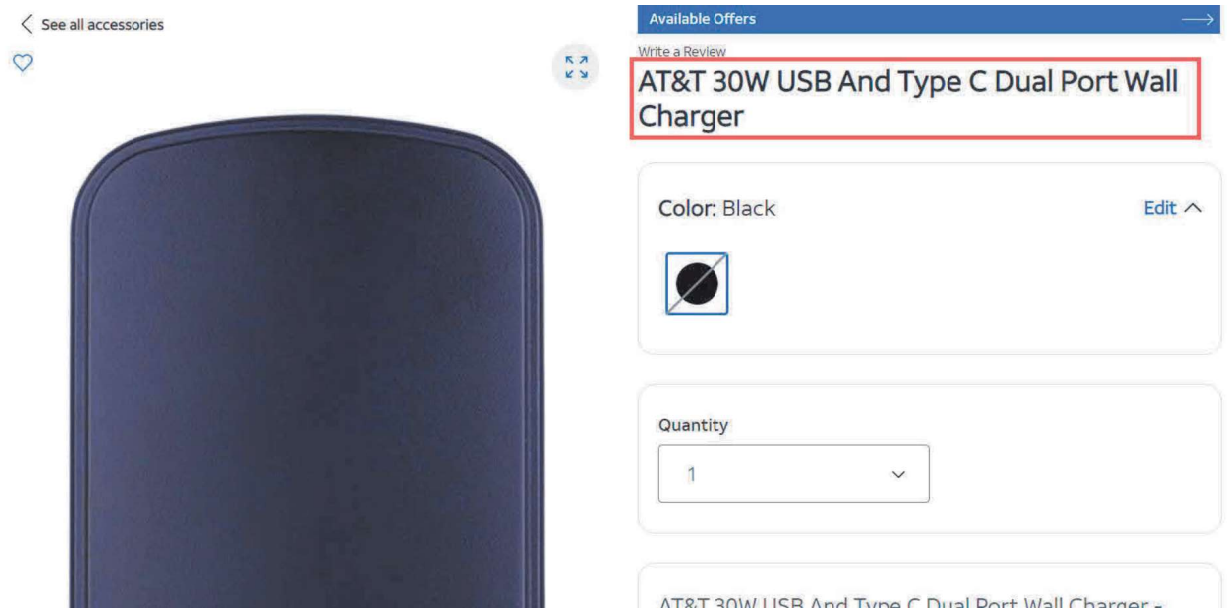

https://www.att.com/buy/accessories/Chargers/att-30w-usb-and-type-c-dual-port-wall-charger-black.html

EXHIBIT 2

Compatible Products

Alcatel

	AXEL		

Apple

iPhone SE 3rd Gen (2022)	iPhone 12 Pro Max	iPad Air 5th Gen (2022)	Watch Nike SE 40mm
iPhone 13 mini	iPhone 12 Pro	iPad Air (2020)	iPad 8th generation
iPhone 13 Pro Max	iPhone 12	iPad 9th Generation (2021)	Watch Series 6 44mm
iPhone 13 Pro	iPad mini (2021)	Watch SE 44mm	Watch Series 6 40mm
iPhone 13	iPad Pro 12.9-inch (2021)	Watch SE 40mm	Watch Nike Series 6 44mm
iPhone 12 mini	iPad Pro 11-inch (2021)	Watch Nike SE 44mm	Watch Nike Series 6 40mm

AT&T

RADIANT Max 5G	Fusion 5G	Unite Express 2	RADIANT Max
Global Modem USB800	Calypso 2	Turbo Hotspot 2	AT&T Fusion Z
	Calypso		

https://www.att.com/buy/accessories/Chargers/att-30w-usb-and-type-c-dual-port-wall-charger-black.html

EXHIBIT 2

	Overview Portable, lightweight wall charger delivers a powerful 30W charge to both a USB-A and USB-C charging port at once. AT&T's fast charge technology turns this wall charger into a safe and rapid charging hub. Charges compatible devices up to 70% faster than standard wall chargers and can get your device up to 50% charged in 30 minutes or less. Discrete LED indicator turns blue when fully charged. Power Delivery Output (USB-C): 5V/3A, 9V2A, 12V/1.5A. Standard USB-A Output: 5V/2.4A. USB Power Delivery 3.0 PPS Certified. Use with AT&T cables for best experience. Key Features and specs: Charges up to 70% faster than standard chargers Charges up to 50% in 30 minutes Charges 2 devices simultaneously with Single USB-C port + Single USB-A port Foldable AC prongs Total output: 30W rapidly charges most portable devices Power Delivery Output (USB-C): 5V/3A, 9V2A, 12V/1.5A USB Power Delivery 3.0 PPS Certified Standard USB-A Output: 5V/2.4A https://www.att.com/buy/accessories/Chargers/att-30w-usb-and-type-c-dual-port-wall-charger-black.html

EXHIBIT 2

	  https://www.att.com/buy/accessories/Chargers/att-30w-usb-and-type-c-dual-port-wall-charger-black.html

EXHIBIT 2

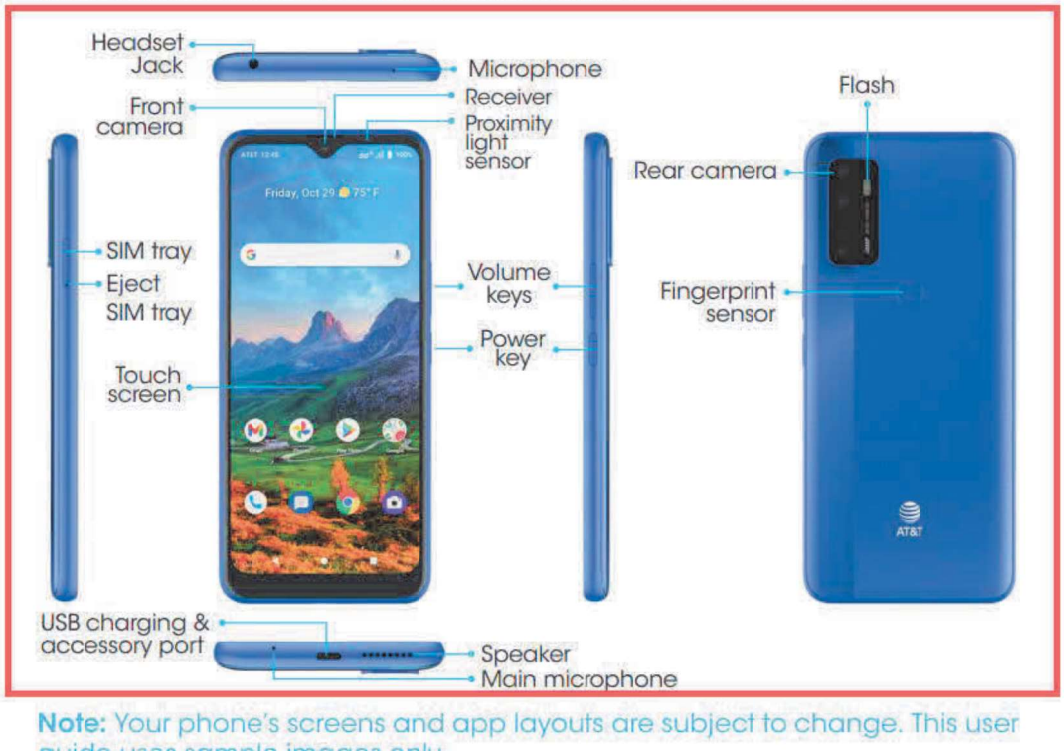

https://www.att.com/idpassets/images/support/device-support/ATT-RADIANTMax5G-EN-UG-INTERACTIVE.pdf

EXHIBIT 2

	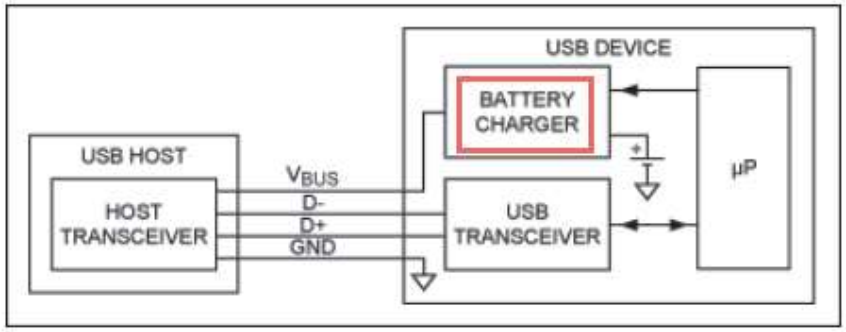 https://www.electronicproducts.com/the-basics-of-usb-battery-charging-a-survival-guide/#
charge the battery using the power received from the converter; and use the battery to power the electronic circuitry.	The accused product practices charging the battery (e.g., battery of the accused product) using the power received from the converter (e.g., converting power from USB to battery charging) and using the battery to power the electronic circuitry (e.g., camera, display, etc. of the accused product).

EXHIBIT 2

Battery

Battery capacity	4,750mAh (non-removable)
Talk time (hours)	Up to 23.05
Standby time (days)	Up to 18
Audio playback time (hours)	Speaker: Up to 24 Headset: Up to 30
Wireless charging capable	✓
Fast charging capable	✓
Time to charge to 50%	Up to 60 minutes
Time to charge to 100%	Up to 160 minutes

https://www.att.com/buy/prepaid-phones/att-radiant-max-5g-64gb-electric-blue-prepaid.html

EXHIBIT 2



https://www.att.com/buy/accessories/Chargers/att-30w-usb-and-type-c-dual-port-wall-charger-black.html

EXHIBIT 2

Compatible Products

Alcatel

	AXEL		

Apple

iPhone SE 3rd Gen (2022)	iPhone 12 Pro Max	iPad Air 5th Gen (2022)	Watch Nike SE 40mm
iPhone 13 mini	iPhone 12 Pro	iPad Air (2020)	iPad 8th generation
iPhone 13 Pro Max	iPhone 12	iPad 9th Generation (2021)	Watch Series 6 44mm
iPhone 13 Pro	iPad mini (2021)	Watch SE 44mm	Watch Series 6 40mm
iPhone 13	iPad Pro 12.9-inch (2021)	Watch SE 40mm	Watch Nike Series 6 44mm
iPhone 12 mini	iPad Pro 11-inch (2021)	Watch Nike SE 44mm	Watch Nike Series 6 40mm

AT&T

RADIANT Max 5G	Fusion 5G	Unite Express 2	RADIANT Max
Global Modem USB800	Calypso 2	Turbo Hotspot 2	AT&T Fusion Z
	Calypso		

https://www.att.com/buy/accessories/Chargers/att-30w-usb-and-type-c-dual-port-wall-charger-black.html

EXHIBIT 2

	Overview Portable, lightweight wall charger delivers a powerful 30W charge to both a USB-A and USB-C charging port at once. AT&T's fast charge technology turns this wall charger into a safe and rapid charging hub. Charges compatible devices up to 70% faster than standard wall chargers and can get your device up to 50% charged in 30 minutes or less. Discrete LED indicator turns blue when fully charged. Power Delivery Output (USB-C): 5V/3A, 9V2A, 12V/1.5A. Standard USB-A Output: 5V/2.4A. USB Power Delivery 3.0 PPS Certified. Use with AT&T cables for best experience. Key Features and specs: Charges up to 70% faster than standard chargers Charges up to 50% in 30 minutes Charges 2 devices simultaneously with Single USB-C port + Single USB-A port Foldable AC prongs Total output: 30W rapidly charges most portable devices Power Delivery Output (USB-C): 5V/3A, 9V2A, 12V/1.5A USB Power Delivery 3.0 PPS Certified Standard USB-A Output: 5V/2.4A https://www.att.com/buy/accessories/Chargers/att-30w-usb-and-type-c-dual-port-wall-charger-black.html

EXHIBIT 2

	  https://www.att.com/buy/accessories/Chargers/att-30w-usb-and-type-c-dual-port-wall-charger-black.html

EXHIBIT 2



https://www.att.com/idpassets/images/support/device-support/ATT-RADIANTMax5G-EN-UG-INTERACTIVE.pdf

EXHIBIT 2

	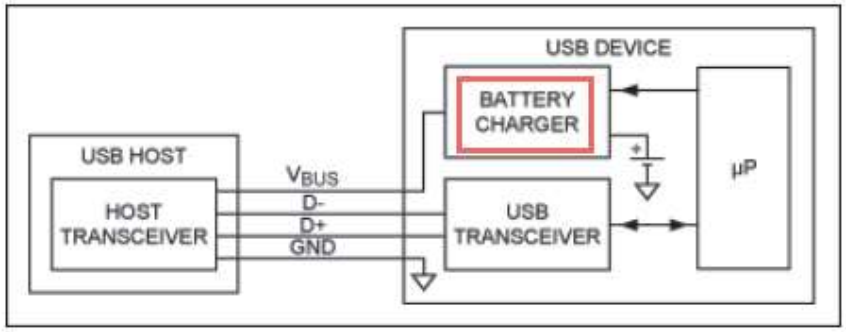 https://www.electronicproducts.com/the-basics-of-usb-battery-charging-a-survival-guide/# As shown below, the accused product comprises a rechargeable battery.

EXHIBIT 2

(3) EUT Photo

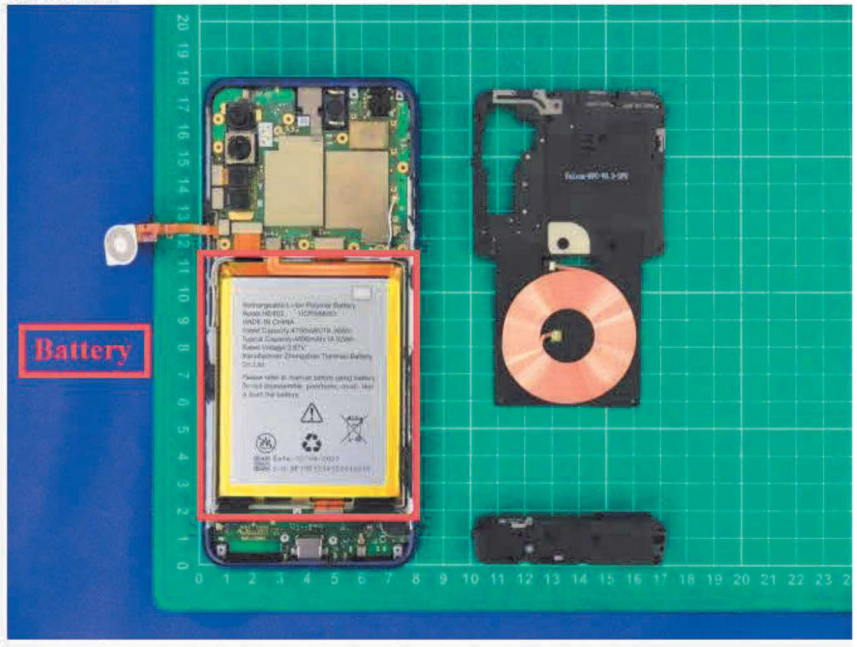

Source: AT&T Radiant Max 5G internal image

As shown below, the accused product comprises Camera, display, etc. which are powered by the battery of the accused product.

EXHIBIT 2

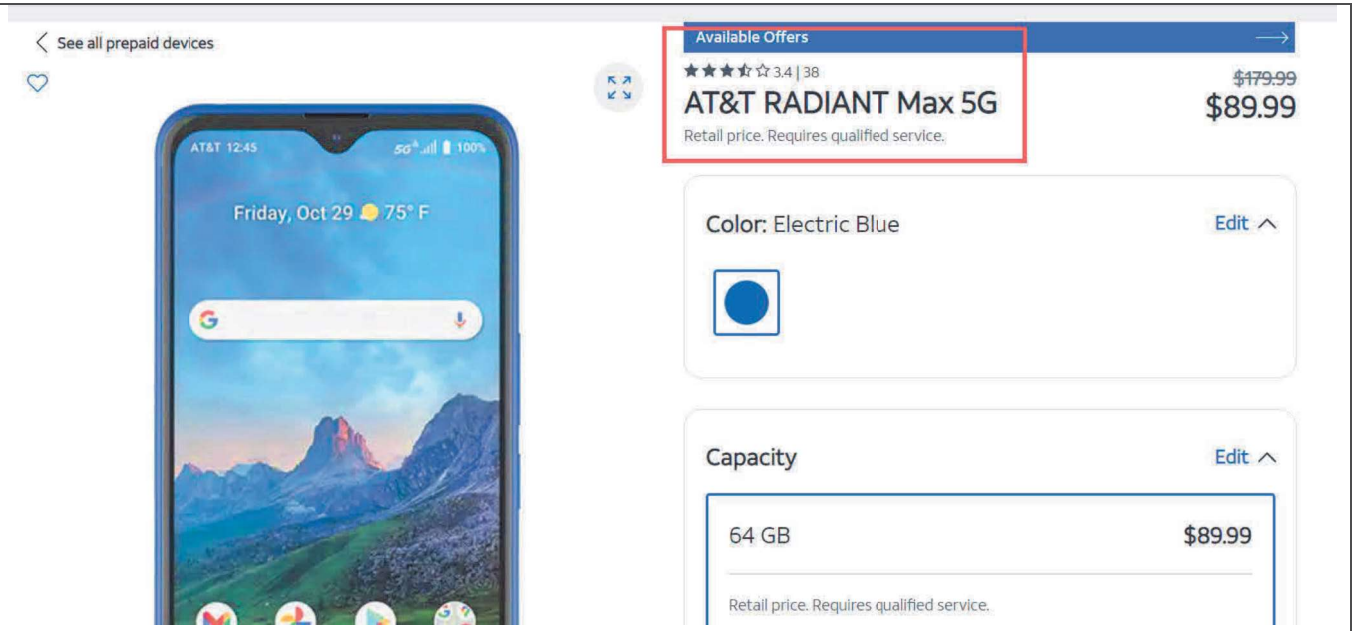

https://www.att.com/buy/prepaid-phones/att-radiant-max-5g-64gb-electric-blue-prepaid.html

EXHIBIT 2

	 https://www.att.com/buy/prepaid-phones/att-radiant-max-5g-64gb-electric-blue-prepaid.html
11. A method of charging a battery-operated device including a battery, an electronic circuitry configured to be powered by the battery, and a converter configured to receive energy from any of a plurality of authorized chargers, and generate power from the energy for charging the battery using the power, the method comprising:	The accused product practices method of charging a battery-operated device (e.g., the accused product) including a battery, an electronic circuitry (e.g., circuitry for camera, display, etc.) configured to be powered by the battery, and a converter (e.g., converting power from USB to battery charging) configured to receive energy (e.g., power from USB) configured to receive energy from any of a plurality of authorized chargers (e.g., a plurality of chargers compliant with USB PD 2.0 and USB PD 3.0 standards), and generate power from the energy for charging the battery (e.g., battery of the accused product) using the power.

EXHIBIT 2

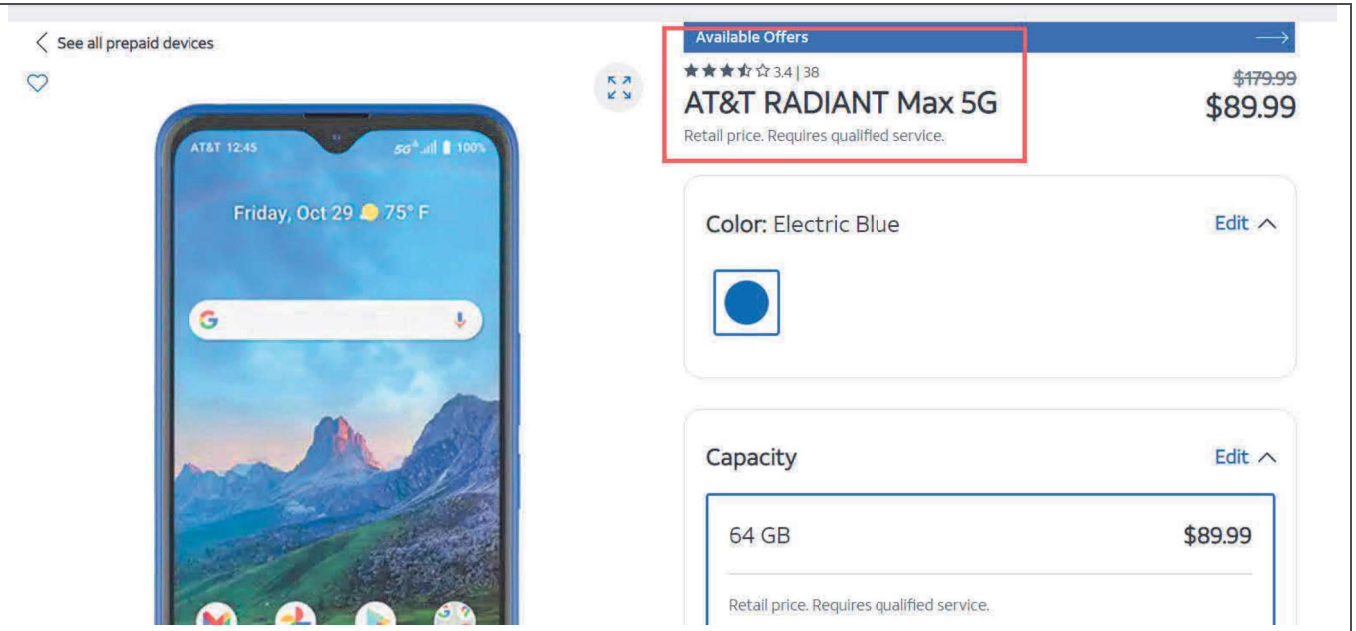

https://www.att.com/buy/prepaid-phones/att-radiant-max-5g-64gb-electric-blue-prepaid.html

EXHIBIT 2

Battery

Battery capacity	4,750mAh (non-removable)
Talk time (hours)	Up to 23.05
Standby time (days)	Up to 18
Audio playback time (hours)	Speaker: Up to 24 Headset: Up to 30
Wireless charging capable	✓
Fast charging capable	✓
Time to charge to 50%	Up to 60 minutes
Time to charge to 100%	Up to 160 minutes

https://www.att.com/buy/prepaid-phones/att-radiant-max-5g-64gb-electric-blue-prepaid.html

EXHIBIT 2

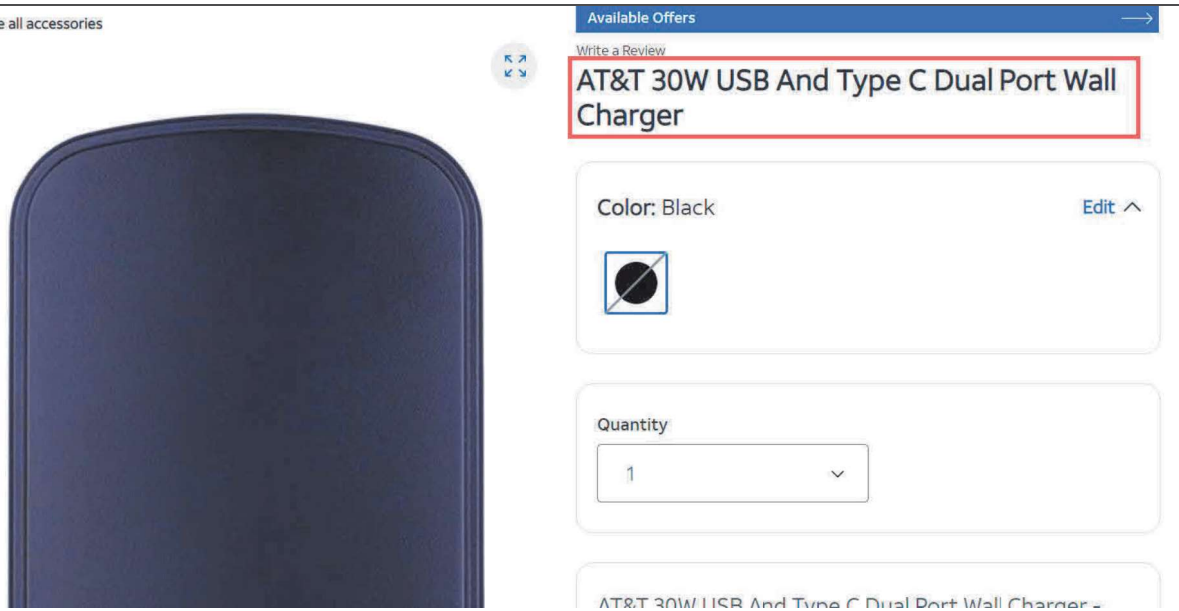

https://www.att.com/buy/accessories/Chargers/att-30w-usb-and-type-c-dual-port-wall-charger-black.html

EXHIBIT 2

	Overview Portable, lightweight wall charger delivers a powerful 30W charge to both a USB-A and USB-C charging port at once. AT&T's fast charge technology turns this wall charger into a safe and rapid charging hub. Charges compatible devices up to 70% faster than standard wall chargers and can get your device up to 50% charged in 30 minutes or less. Discrete LED indicator turns blue when fully charged. Power Delivery Output (USB-C): 5V/3A, 9V2A, 12V/1.5A. Standard USB-A Output: 5V/2.4A. USB Power Delivery 3.0 PPS Certified. Use with AT&T cables for best experience. Key Features and specs: Charges up to 70% faster than standard chargers Charges up to 50% in 30 minutes Charges 2 devices simultaneously with Single USB-C port + Single USB-A port Foldable AC prongs Total output: 30W rapidly charges most portable devices Power Delivery Output (USB-C): 5V/3A, 9V2A, 12V/1.5A USB Power Delivery 3.0 PPS Certified Standard USB-A Output: 5V/2.4A https://www.att.com/buy/accessories/Chargers/att-30w-usb-and-type-c-dual-port-wall-charger-black.html

EXHIBIT 2

Compatible Products

Alcatel

	AXEL		

Apple

iPhone SE 3rd Gen (2022)	iPhone 12 Pro Max	iPad Air 5th Gen (2022)	Watch Nike SE 40mm
iPhone 13 mini	iPhone 12 Pro	iPad Air (2020)	iPad 8th generation
iPhone 13 Pro Max	iPhone 12	iPad 9th Generation (2021)	Watch Series 6 44mm
iPhone 13 Pro	iPad mini (2021)	Watch SE 44mm	Watch Series 6 40mm
iPhone 13	iPad Pro 12.9-inch (2021)	Watch SE 40mm	Watch Nike Series 6 44mm
iPhone 12 mini	iPad Pro 11-inch (2021)	Watch Nike SE 44mm	Watch Nike Series 6 40mm

AT&T

RADIANT Max 5G	Fusion 5G	Unite Express 2	RADIANT Max
Global Modem USB800	Calypso 2	Turbo Hotspot 2	AT&T Fusion Z
	Calypso		

https://www.att.com/buy/accessories/Chargers/att-30w-usb-and-type-c-dual-port-wall-charger-black.html

EXHIBIT 2

	(3) EUT Photo 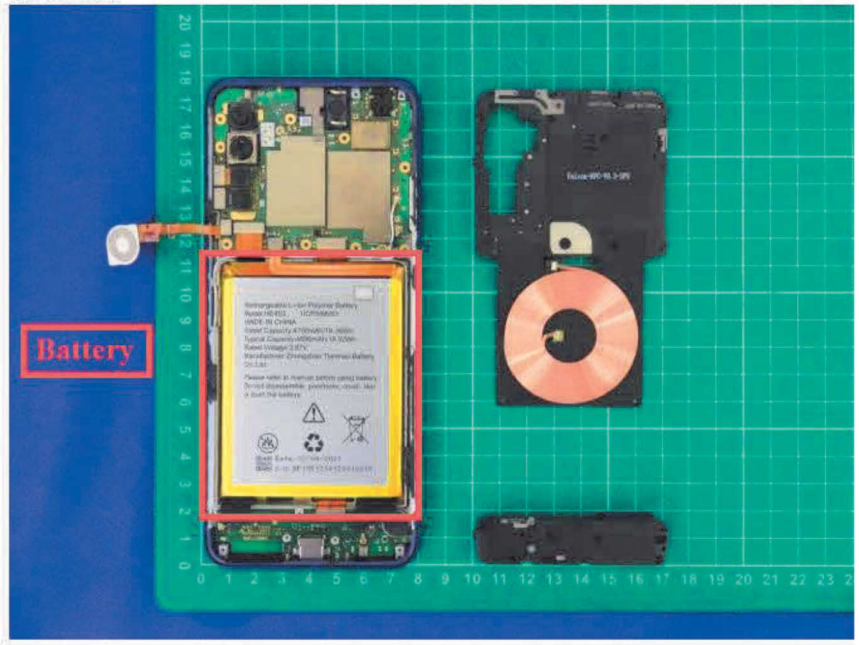 *Source: AT&T Radiant Max 5G internal image* The accused product comprises circuitries for camera, display, etc. which are powered by the battery of the accused product.

EXHIBIT 2

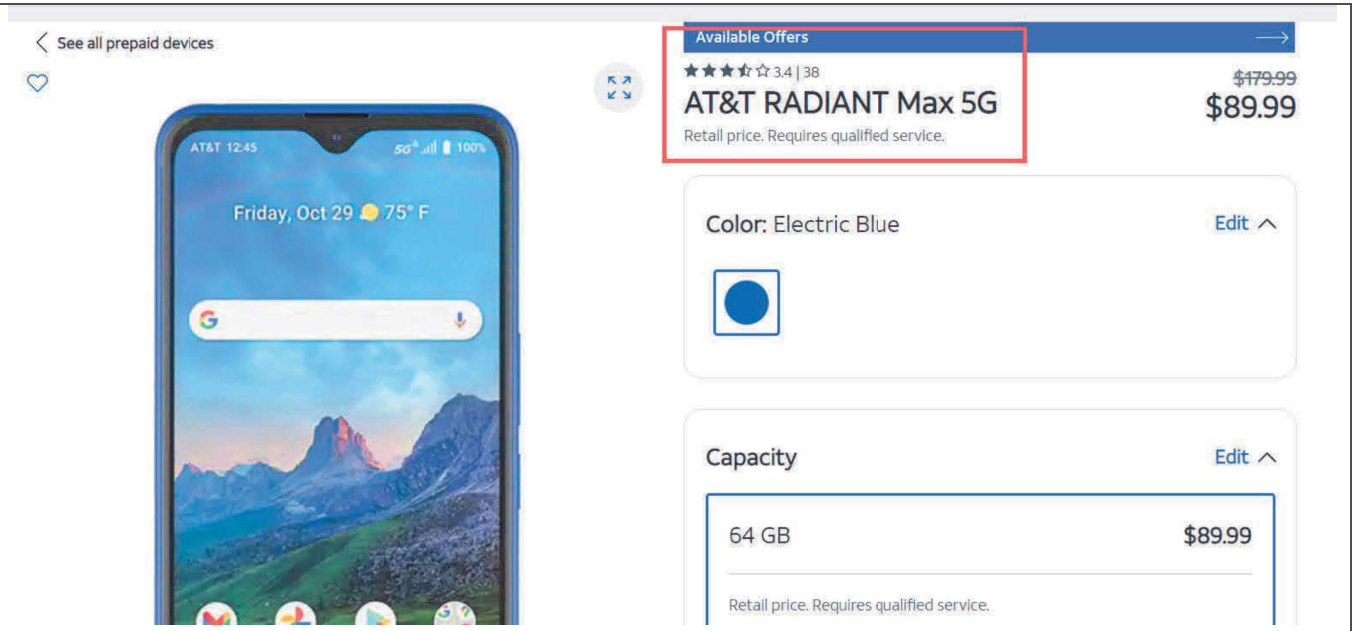

https://www.att.com/buy/prepaid-phones/att-radiant-max-5g-64gb-electric-blue-prepaid.html

EXHIBIT 2

	 https://www.att.com/buy/prepaid-phones/att-radiant-max-5g-64gb-electric-blue-prepaid.html

EXHIBIT 2



https://www.att.com/buy/accessories/Chargers/att-30w-usb-and-type-c-dual-port-wall-charger-black.html

EXHIBIT 2



https://www.att.com/buy/accessories/Chargers/att-30w-usb-and-type-c-dual-port-wall-charger-black.html

The accused product charges its battery in compliance with USB PD 3.0 charging standard. The USB PD 3.0 standard provides the same output power support as the USB PD 2.0 and in addition provides programmable power supply (PPS) and is backward compatible with USB PD 2.0 for charging the battery.

EXHIBIT 2

Battery

Battery capacity	4,750mAh (non-removable)
Talk time (hours)	Up to 23.05
Standby time (days)	Up to 18
Audio playback time (hours)	Speaker: Up to 24 Headset: Up to 30
Wireless charging capable	✓
Fast charging capable	✓
Time to charge to 50%	Up to 60 minutes
Time to charge to 100%	Up to 160 minutes

https://www.att.com/buy/prepaid-phones/att-radiant-max-5g-64gb-electric-blue-prepaid.html

EXHIBIT 2

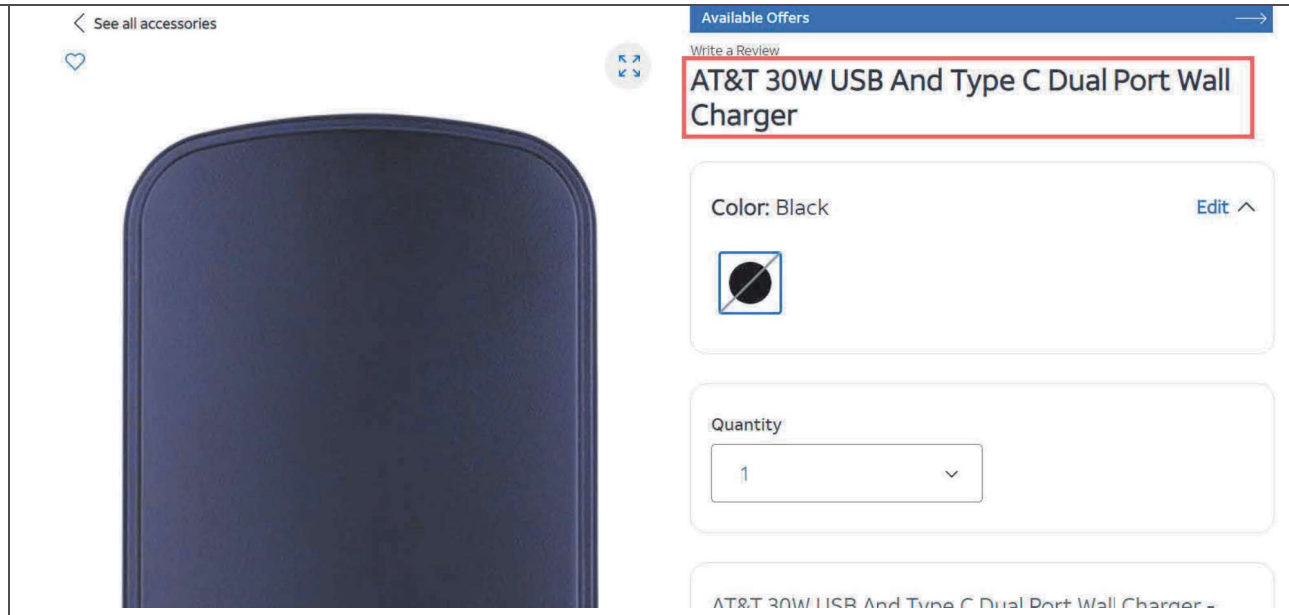

https://www.att.com/buy/accessories/Chargers/att-30w-usb-and-type-c-dual-port-wall-charger-black.html

EXHIBIT 2

Compatible Products

Alcatel

	AXEL		

Apple

iPhone SE 3rd Gen (2022)	iPhone 12 Pro Max	iPad Air 5th Gen (2022)	Watch Nike SE 40mm
iPhone 13 mini	iPhone 12 Pro	iPad Air (2020)	iPad 8th generation
iPhone 13 Pro Max	iPhone 12	iPad 9th Generation (2021)	Watch Series 6 44mm
iPhone 13 Pro	iPad mini (2021)	Watch SE 44mm	Watch Series 6 40mm
iPhone 13	iPad Pro 12.9-inch (2021)	Watch SE 40mm	Watch Nike Series 6 44mm
iPhone 12 mini	iPad Pro 11-inch (2021)	Watch Nike SE 44mm	Watch Nike Series 6 40mm

AT&T

RADIANT Max 5G	Fusion 5G	Unite Express 2	RADIANT Max
Global Modem USB800	Calypso 2	Turbo Hotspot 2	AT&T Fusion Z
	Calypso		

https://www.att.com/buy/accessories/Chargers/att-30w-usb-and-type-c-dual-port-wall-charger-black.html

EXHIBIT 2

	Overview Portable, lightweight wall charger delivers a powerful 30W charge to both a USB-A and USB-C charging port at once. AT&T's fast charge technology turns this wall charger into a safe and rapid charging hub. Charges compatible devices up to 70% faster than standard wall chargers and can get your device up to 50% charged in 30 minutes or less. Discrete LED indicator turns blue when fully charged. Power Delivery Output (USB-C): 5V/3A, 9V2A, 12V/1.5A. Standard USB-A Output: 5V/2.4A. USB Power Delivery 3.0 PPS Certified. Use with AT&T cables for best experience. Key Features and specs: Charges up to 70% faster than standard chargers Charges up to 50% in 30 minutes Charges 2 devices simultaneously with Single USB-C port + Single USB-A port Foldable AC prongs Total output: 30W rapidly charges most portable devices Power Delivery Output (USB-C): 5V/3A, 9V2A, 12V/1.5A USB Power Delivery 3.0 PPS Certified Standard USB-A Output: 5V/2.4A https://www.att.com/buy/accessories/Chargers/att-30w-usb-and-type-c-dual-port-wall-charger-black.html

EXHIBIT 2

Version	USB BC 1.2	USB PD 1.0	USB PD 2.0	USB PD 3.0	USB PD 3.0 PPS	USB PD 3.1
Release date	2010	2012	2014	2015	2017	2021
USB type	USB Type-A	USB Type-A, USB Type-B	USB Type-C	USB Type-C	USB Type-C	USB Type-C
Output support	5V1, 5A		5V 3A, 9V 3A, 15V 3A, 20V 2.25A, 20V 3A, 20V 5A	5V 3A, 9V 3A, 15V 3A, 20V 2.25A, 20V 3A, 20V 5A	5V 3A, 9V 3A, 15V 3A, 20V 2.25A, 20V 3A, 20V 5A PPS: 3.3V-5.9V 3A, 3.3-11V 3A, 3.3-16V 3A, 3.3-21V 3A, 3.3-21V 5A	5V 3A, 9V 3A, 15V 3A, 20V 3A, 20V 5A PPS: 3.3V-5.9V 3A, 3.3-11V 3A, 3.3-16V 3A, 3.3-21V 3A, 3.3-21V 5A AVS: 15-28V 5A, 15-36V 5A, 15-48V 5A

https://www.thephonetalks.com/usb-pd-2-0-vs-3-0-vs-3-1/

EXHIBIT 2

	  https://www.att.com/buy/accessories/Chargers/att-30w-usb-and-type-c-dual-port-wall-charger-black.html

EXHIBIT 2



https://www.att.com/idpassets/images/support/device-support/ATT-RADIANTMax5G-EN-UG-INTERACTIVE.pdf

EXHIBIT 2

Battery

Battery capacity	4,750mAh (non-removable)
Talk time (hours)	Up to 23.05
Standby time (days)	Up to 18
Audio playback time (hours)	Speaker: Up to 24 Headset: Up to 30
Wireless charging capable	✓
Fast charging capable	✓
Time to charge to 50%	Up to 60 minutes
Time to charge to 100%	Up to 160 minutes

https://www.att.com/buy/prepaid-phones/att-radiant-max-5g-64gb-electric-blue-prepaid.html

EXHIBIT 2

Overview

Portable, lightweight wall charger delivers a powerful 30W charge to both a USB-A and USB-C charging port at once. AT&T's fast charge technology turns this wall charger into a safe and rapid charging hub. Charges compatible devices up to 70% faster than standard wall chargers and can get your device up to 50% charged in 30 minutes or less. Discrete LED indicator turns blue when fully charged. Power Delivery Output (USB-C): 5V/3A, 9V2A, 12V/1.5A. Standard USB-A Output: 5V/2.4A. USB Power Delivery 3.0 PPS Certified. Use with AT&T cables for best experience.

Key Features and specs:
Charges up to 70% faster than standard chargers
Charges up to 50% in 30 minutes
Charges 2 devices simultaneously with Single USB-C port + Single USB-A port
Foldable AC prongs
Total output: 30W rapidly charges most portable devices
Power Delivery Output (USB-C): 5V/3A, 9V2A, 12V/1.5A
USB Power Delivery 3.0 PPS Certified
Standard USB-A Output: 5V/2.4A

https://www.att.com/buy/accessories/Chargers/att-30w-usb-and-type-c-dual-port-wall-charger-black.html

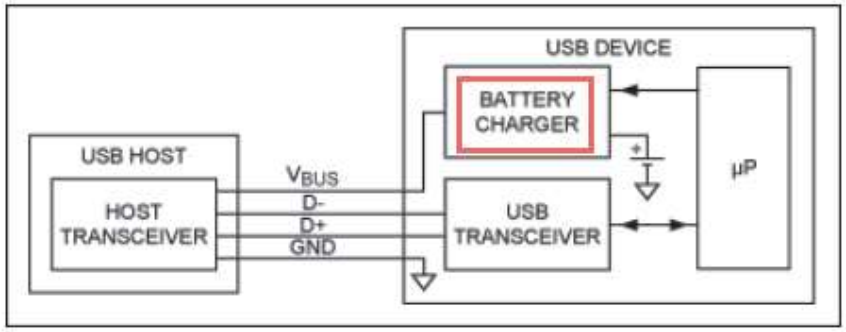

EXHIBIT 2

	https://www.electronicproducts.com/the-basics-of-usb-battery-charging-a-survival-guide/# **2.3 Compatibility with Revision 2.0** Revision 3.0 of the USB Power Delivery specification is designed to be fully interoperable with *[USBPD 2.0]* systems using BMC signaling over the *[USB Type-C 2.0]* connector and to be compatible with Revision 2.0 hardware. This specification mandates that all Revision 3.0 systems fully support Revision 2.0 operation. They must discover the supported Revision used by their Port Partner and any connected Cable Plugs and revert to operation using the lowest common Revision number (see Section 6.2.1.1.5). This specification defines Extended Messages containing data of up to 260 bytes (see Section 6.2.1.2). These Messages will be larger than expected by existing PHY HW. To accommodate Revision 2.0 based systems a Chunking mechanism is mandated such that Messages are limited to Revision 2.0 sizes unless it is discovered that both systems support the longer Message lengths. *Source: USB PD 3.0 specification.PDF* The accused product receives energy from a charger (e.g., an authorized charger complying with USB PD 2.0 or USB PD 3.0) which provides messages according to USB PD standards to indicate its charging capabilities and specification revision value. After selection of the common specification revision level and negotiation of power requirements, it generates power for charging the battery from the received energy.

EXHIBIT 2

6.2.1.1.5 Specification Revision

The ***Specification Revision*** field ***Shall*** be one of the following values (except 11b):

- 00b –Revision 1.0
- 01b –Revision 2.0
- 10b – Revision 3.0
- 11b – ***Reserved***, ***Shall Not*** be used

To ensure interoperability with existing USBPD Products, USBPD Products ***Shall*** support every PD Specification Revision starting from ***[USBPD 2.0]*** for ***SOP****; the only exception to this is a VPD which ***Shall Ignore*** Messages sent with PD Specification Revision 2.0 and earlier.

After a physical or logical (USB Type-C® Error Recovery) Attach, a Port discovers the common Specification Revision level between itself and its Port Partner and/or the Cable Plug(s), and uses this Specification Revision level until a Detach, Hard Reset or Error Recovery happens.

After detection of the Specification Revision to be used, all PD communications ***Shall*** comply completely with the relevant revision of the PD specification.

An Attach event or a Hard Reset ***Shall*** cause the detection of the applicable Specification Revision to be performed for both Ports and Cable Plugs according to the rules stated below:

When the Source Port first communicates with the Sink Port the ***Specification Revision*** field ***Shall*** be used as described by the following steps:

1. The Source Port sends a ***Source_Capabilities*** Message to the Sink Port setting the ***Specification Revision*** field to the highest Revision of the Power Delivery Specification the Source Port supports.
2. The Sink Port responds with a ***Request*** Message setting the ***Specification Revision*** field to the highest Revision of the Power Delivery Specification the Sink Port supports that is equal to or lower than the ***Specification Revision*** received from the Source Port.
3. The Source and Sink Ports ***Shall*** use the ***Specification Revision*** in the ***Request*** Message from the Sink in step 2 in all subsequent communications until a Detach, Hard Reset, or Error Recovery happens.

EXHIBIT 2

Table 6-1 Message Header

Bit(s)	Start of Packet	Field Name	Reference
15	SOP*	*Extended*	Section 6.2.1.1.1
14...12	SOP*	*Number of Data Objects*	Section 6.2.1.1.2
11...9	SOP*	*MessageID*	Section 6.2.1.1.3
8	SOP only	*Port Power Role*	Section 6.2.1.1.4
	SOP'/SOP''	*Cable Plug*	Section 6.2.1.1.7
7...6	SOP*	*Specification Revision*	Section 6.2.1.1.5
5	SOP only	*Port Data Role*	Section 6.2.1.1.6
	SOP'/SOP''	***Reserved***	Section 1.4.2.10
4...0	SOP*	*Message Type*	Section 6.2.1.1.8

2.6.2 Sink Operation

- At Attach (no PD Connection or Contract):
  - Sink detects Source Attachment through the presence of *vSafe5V*.
  - For a DRP that toggles the Port becomes a Sink Port on Attachment of a Source.
  - Once the Sink detects the presence of *vSafe5V* on V_{BUS} it waits for a *Source_Capabilities* Message indicating the presence of a PD capable Source.
  - If the Sink does not receive a *Source_Capabilities* Message within *tTypeCSinkWaitCap* then it issues *Hard Reset* Signaling in order to cause the Source Port to send a *Source_Capabilities* Message if the Source Port is PD capable.
  - The Sink does not generate SOP' or SOP'' Packets, is not required to detect SOP' or SOP'' Packets and does not recognize them.
- Establishing PD Connection (no PD Connection or Contract):
  - The Sink receives a *Source_Capabilities* Message and responds with a *GoodCRC* Message.
  - The Sink does not generate SOP' or SOP'' Packets, is not required to detect SOP' or SOP'' Packets and ***Discards*** them.

EXHIBIT 2

	6.4.1.2 Source_Capabilities Message A Source Port ***Shall*** report its capabilities in a series of 32-bit Power Data Objects (see Table 6-7) as part of a ***Source_Capabilities*** Message (see Figure 6-12). Power Data Objects are used to convey a Source Port's capabilities to provide power including Dual-Role Power ports presently operating as a Sink. Each Power Data Object ***Shall*** describe a specific Source capability such as a Battery (e.g. 2.8-4.1V) or a fixed power supply (e.g. 12V) at a maximum allowable current. The ***Number of Data Objects*** field in the Message Header ***Shall*** define the number of Power Data Objects that follow the Message Header in a Data Message. All Sources ***Shall*** minimally offer one Power Data Object that reports ***vSafe5V***. A Source ***Shall Not*** offer multiple Power Data Objects of the same type (fixed, variable, Battery) and the same voltage but ***Shall*** instead offer one Power Data Object with the highest available current for that Source capability and voltage. Sinks with Accessory Support do not source V_{BUS} (see ***[USB Type-C 2.0]***). Sinks with Accessory Support are still considered Sources when sourcing V_{CONN} to an Accessory even though V_{BUS} is not applied; in this case they ***Shall*** advertise ***vSafe5V*** with the Maximum Current set to 0mA in the first Power Data Object. The main purpose of this is to enable the Sink with Accessory Support to get into the ***PE_SRC_Ready*** State in order to enter an Alternate Mode. A Sink ***Shall*** evaluate every ***Source_Capabilities*** Message it receives and ***Shall*** respond with a ***Request*** Message. If its power consumption exceeds the Source's capabilities it ***Shall*** re-negotiate so as not to exceed the Source's most recently advertised capabilities. A Sink that evaluates the ***Source_Capabilities*** Message it receives and identifies a PPS APDO ***Shall*** periodically re-request the PPS APDO at least every ***tPPSRequest*** until either:

EXHIBIT 2

6.4.1 Capabilities Message

A Capabilities Message (*Source_Capabilities* Message or *Sink_Capabilities* Message) ***Shall*** have at least one Power Data Object for *vSafe5V*. The Capabilities Message ***Shall*** also contain the sending Port's information followed by up to 6 additional Power Data Objects. Power Data Objects in a Capabilities Message ***Shall*** be sent in the following order:

1. The *vSafe5V* Fixed Supply Object ***Shall*** always be the first object.
2. The remaining Fixed Supply Objects, if present, ***Shall*** be sent in voltage order; lowest to highest.
3. The Battery Supply Objects, if present ***Shall*** be sent in Minimum Voltage order; lowest to highest.
4. The Variable Supply (non-Battery) Objects, if present, ***Shall*** be sent in Minimum Voltage order; lowest to highest.
5. The Programmable Power Supply Objects, if present, ***Shall*** be sent in Maximum Voltage order, lowest to highest.

Figure 6-12 Example Capabilities Message with 2 Power Data Objects

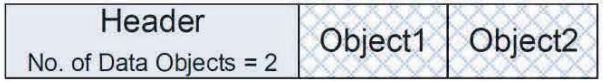

In Figure 6-12, the *Number of Data Objects* field is 2: *vSafe5V* plus one other voltage.

Power Data Objects (PDO) and Augmented Power Data Objects (APDO) are identified by the Message Header's Type field. They are used to form *Source_Capabilities* Messages and *Sink_Capabilities* Messages.

EXHIBIT 2

<table>
<tr>
<td></td>
<td>
Sources expose their power capabilities by sending a Source_Capabilities Message. Sinks expose their power requirements by sending a Sink_Capabilities Message. Both are composed of a number of 32-bit Power Data Objects (see Table 6-7).

Table 6-7 Power Data Object
<table>
<tr><th>Bit(s)</th><th colspan="2">Description</th></tr>
<tr><td>B31...30</td><td>Value</td><td>Parameter</td></tr>
<tr><td></td><td>00b</td><td>Fixed supply (Vmin = Vmax)</td></tr>
<tr><td></td><td>01b</td><td>Battery</td></tr>
<tr><td></td><td>10b</td><td>Variable Supply (non-Battery)</td></tr>
<tr><td></td><td>11b</td><td>Augmented Power Data Object (APDO)</td></tr>
<tr><td>B29...0</td><td colspan="2">Specific Power Capabilities are described by the PDOs in the following sections.</td></tr>
</table>
The Augmented Power Data Object (APDO) is defined to allow support for more than the four PDO types by extending the Power Data Object field from 2 to 4 bits when the B31...B30 are 11b. The generic APDO structure is shown in Table 6-8.

Table 6-8 Augmented Power Data Object
<table>
<tr><th>Bit(s)</th><th>Description</th></tr>
<tr><td>B31...30</td><td>11b – Augmented Power Datat Object (APDO)</td></tr>
<tr><td>B29...28</td><td>00b – Programmable Power Supply
01b-11b - Reserved</td></tr>
<tr><td>B27...0</td><td>Specific Power Capabilities are described by the APDOs in the following sections.</td></tr>
</table>

Source: USB PD 3.0 specification.PDF
</td>
</tr>
<tr>
<td>receiving a charger identification from a charger;

Excerpt from US’246 [13:5-15]:
C. Power Transfer only from Authorized Masters</td>
<td>The accused product practices receiving a charger identification (e.g., information related to capabilities of a charger as well as specification revision value supported by the charger as indicated in the Source_Capabilities Message) from a charger.</td>
</tr>
</table>

EXHIBIT 2

A slave prevents non-authorized masters from trying to charge it or power it up (or networked servers from commanding masters to charge it or power it up) in some embodiments. Slaves store ***identifying information about masters (or networked servers) that are authorized to charge them. The stored information about authorized masters or networked servers includes one or more of the following*** *information about the masters: the masters' media access control address (MAC ID), network IP address, name, serial number, product name and manufacturer,* ***capabilities****, etc.*	**Battery** Battery capacity: 4,750mAh (non-removable) Talk time (hours): Up to 23.05 Standby time (days): Up to 18 Audio playback time (hours): Speaker: Up to 24 Headset: Up to 30 Wireless charging capable: ✓ Fast charging capable: ✓ Time to charge to 50%: Up to 60 minutes Time to charge to 100%: Up to 160 minutes https://www.att.com/buy/prepaid-phones/att-radiant-max-5g-64gb-electric-blue-prepaid.html

EXHIBIT 2



https://www.att.com/buy/accessories/Chargers/att-30w-usb-and-type-c-dual-port-wall-charger-black.html

EXHIBIT 2

Compatible Products

Alcatel

	AXEL		

Apple

iPhone SE 3rd Gen (2022)	iPhone 12 Pro Max	iPad Air 5th Gen (2022)	Watch Nike SE 40mm
iPhone 13 mini	iPhone 12 Pro	iPad Air (2020)	iPad 8th generation
iPhone 13 Pro Max	iPhone 12	iPad 9th Generation (2021)	Watch Series 6 44mm
iPhone 13 Pro	iPad mini (2021)	Watch SE 44mm	Watch Series 6 40mm
iPhone 13	iPad Pro 12.9-inch (2021)	Watch SE 40mm	Watch Nike Series 6 44mm
iPhone 12 mini	iPad Pro 11-inch (2021)	Watch Nike SE 44mm	Watch Nike Series 6 40mm

AT&T

RADIANT Max 5G	Fusion 5G	Unite Express 2	RADIANT Max
Global Modem USB800	Calypso 2	Turbo Hotspot 2	AT&T Fusion Z
	Calypso		

https://www.att.com/buy/accessories/Chargers/att-30w-usb-and-type-c-dual-port-wall-charger-black.html

EXHIBIT 2

Overview

Portable, lightweight wall charger delivers a powerful 30W charge to both a USB-A and USB-C charging port at once. AT&T's fast charge technology turns this wall charger into a safe and rapid charging hub. Charges compatible devices up to 70% faster than standard wall chargers and can get your device up to 50% charged in 30 minutes or less. Discrete LED indicator turns blue when fully charged. Power Delivery Output (USB-C): 5V/3A, 9V2A, 12V/1.5A. Standard USB-A Output: 5V/2.4A. USB Power Delivery 3.0 PPS Certified. Use with AT&T cables for best experience.

Key Features and specs:
Charges up to 70% faster than standard chargers
Charges up to 50% in 30 minutes
Charges 2 devices simultaneously with Single USB-C port + Single USB-A port
Foldable AC prongs
Total output: 30W rapidly charges most portable devices
Power Delivery Output (USB-C): 5V/3A, 9V2A, 12V/1.5A
USB Power Delivery 3.0 PPS Certified
Standard USB-A Output: 5V/2.4A

https://www.att.com/buy/accessories/Chargers/att-30w-usb-and-type-c-dual-port-wall-charger-black.html

An Attach event or a Hard Reset ***Shall*** cause the detection of the applicable Specification Revision to be performed for both Ports and Cable Plugs according to the rules stated below:

When the Source Port first communicates with the Sink Port the ***Specification Revision*** field ***Shall*** be used as described by the following steps:

1. The Source Port sends a ***Source Capabilities*** Message to the Sink Port setting the ***Specification Revision*** field to the highest Revision of the Power Delivery Specification the Source Port supports.
2. The Sink Port responds with a ***Request*** Message setting the ***Specification Revision*** field to the highest Revision of the Power Delivery Specification the Sink Port supports that is equal to or lower than the ***Specification Revision*** received from the Source Port.
3. The Source and Sink Ports ***Shall*** use the ***Specification Revision*** in the ***Request*** Message from the Sink in step 2 in all subsequent communications until a Detach, Hard Reset, or Error Recovery happens.

EXHIBIT 2

Table 6-1 Message Header

Bit(s)	Start of Packet	Field Name	Reference
15	SOP*	*Extended*	Section 6.2.1.1.1
14...12	SOP*	*Number of Data Objects*	Section 6.2.1.1.2
11...9	SOP*	*MessageID*	Section 6.2.1.1.3
8	SOP only	*Port Power Role*	Section 6.2.1.1.4
	SOP'/SOP''	*Cable Plug*	Section 6.2.1.1.7
7...6	SOP*	*Specification Revision*	Section 6.2.1.1.5
5	SOP only	*Port Data Role*	Section 6.2.1.1.6
	SOP'/SOP''	***Reserved***	Section 1.4.2.10
4...0	SOP*	*Message Type*	Section 6.2.1.1.8

2.6.2 Sink Operation

- At Attach (no PD Connection or Contract):
  - Sink detects Source Attachment through the presence of *vSafe5V*.
  - For a DRP that toggles the Port becomes a Sink Port on Attachment of a Source.
  - Once the Sink detects the presence of *vSafe5V* on V_{BUS} it waits for a *Source_Capabilities* Message indicating the presence of a PD capable Source.
  - If the Sink does not receive a *Source_Capabilities* Message within *tTypeCSinkWaitCap* then it issues *Hard Reset* Signaling in order to cause the Source Port to send a *Source_Capabilities* Message if the Source Port is PD capable.
  - The Sink does not generate SOP' or SOP'' Packets, is not required to detect SOP' or SOP'' Packets and does not recognize them.
- Establishing PD Connection (no PD Connection or Contract):
  - The Sink receives a *Source_Capabilities* Message and responds with a *GoodCRC* Message.
  - The Sink does not generate SOP' or SOP'' Packets, is not required to detect SOP' or SOP'' Packets and ***Discards*** them.

EXHIBIT 2

	6.4.1.2 Source_Capabilities Message A Source Port ***Shall*** report its capabilities in a series of 32-bit Power Data Objects (see Table 6-7) as part of a ***Source_Capabilities*** Message (see Figure 6-12). Power Data Objects are used to convey a Source Port's capabilities to provide power including Dual-Role Power ports presently operating as a Sink. Each Power Data Object ***Shall*** describe a specific Source capability such as a Battery (e.g. 2.8-4.1V) or a fixed power supply (e.g. 12V) at a maximum allowable current. The ***Number of Data Objects*** field in the Message Header ***Shall*** define the number of Power Data Objects that follow the Message Header in a Data Message. All Sources ***Shall*** minimally offer one Power Data Object that reports ***vSafe5V***. A Source ***Shall Not*** offer multiple Power Data Objects of the same type (fixed, variable, Battery) and the same voltage but ***Shall*** instead offer one Power Data Object with the highest available current for that Source capability and voltage. Sinks with Accessory Support do not source V_{BUS} (see ***[USB Type-C 2.0]***). Sinks with Accessory Support are still considered Sources when sourcing V_{CONN} to an Accessory even though V_{BUS} is not applied; in this case they ***Shall*** advertise ***vSafe5V*** with the Maximum Current set to 0mA in the first Power Data Object. The main purpose of this is to enable the Sink with Accessory Support to get into the ***PE_SRC_Ready*** State in order to enter an Alternate Mode. A Sink ***Shall*** evaluate every ***Source_Capabilities*** Message it receives and ***Shall*** respond with a ***Request*** Message. If its power consumption exceeds the Source's capabilities it ***Shall*** re-negotiate so as not to exceed the Source's most recently advertised capabilities. A Sink that evaluates the ***Source_Capabilities*** Message it receives and identifies a PPS APDO ***Shall*** periodically re-request the PPS APDO at least every ***tPPSRequest*** until either:

EXHIBIT 2

6.4.1 Capabilities Message

A Capabilities Message (*Source_Capabilities* Message or *Sink_Capabilities* Message) ***Shall*** have at least one Power Data Object for *vSafe5V*. The Capabilities Message ***Shall*** also contain the sending Port's information followed by up to 6 additional Power Data Objects. Power Data Objects in a Capabilities Message ***Shall*** be sent in the following order:

1. The *vSafe5V* Fixed Supply Object ***Shall*** always be the first object.
2. The remaining Fixed Supply Objects, if present, ***Shall*** be sent in voltage order; lowest to highest.
3. The Battery Supply Objects, if present ***Shall*** be sent in Minimum Voltage order; lowest to highest.
4. The Variable Supply (non-Battery) Objects, if present, ***Shall*** be sent in Minimum Voltage order; lowest to highest.
5. The Programmable Power Supply Objects, if present, ***Shall*** be sent in Maximum Voltage order, lowest to highest.

Figure 6-12 Example Capabilities Message with 2 Power Data Objects

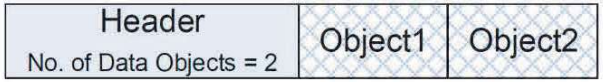

In Figure 6-12, the *Number of Data Objects* field is 2: *vSafe5V* plus one other voltage.

Power Data Objects (PDO) and Augmented Power Data Objects (APDO) are identified by the Message Header's Type field. They are used to form *Source_Capabilities* Messages and *Sink_Capabilities* Messages.

EXHIBIT 2

<table>
<tr>
<td></td>
<td>
Sources expose their power capabilities by sending a Source_Capabilities Message. Sinks expose their power requirements by sending a Sink_Capabilities Message. Both are composed of a number of 32-bit Power Data Objects (see Table 6-7).

Table 6-7 Power Data Object
<table>
<tr><th>Bit(s)</th><th colspan="2">Description</th></tr>
<tr><td>B31...30</td><td>Value</td><td>Parameter</td></tr>
<tr><td></td><td>00b</td><td>Fixed supply (Vmin = Vmax)</td></tr>
<tr><td></td><td>01b</td><td>Battery</td></tr>
<tr><td></td><td>10b</td><td>Variable Supply (non-Battery)</td></tr>
<tr><td></td><td>11b</td><td>Augmented Power Data Object (APDO)</td></tr>
<tr><td>B29...0</td><td colspan="2">Specific Power Capabilities are described by the PDOs in the following sections.</td></tr>
</table>
The Augmented Power Data Object (APDO) is defined to allow support for more than the four PDO types by extending the Power Data Object field from 2 to 4 bits when the B31...B30 are 11b. The generic APDO structure is shown in Table 6-8.

Table 6-8 Augmented Power Data Object
<table>
<tr><th>Bit(s)</th><th>Description</th></tr>
<tr><td>B31...30</td><td>11b – Augmented Power Datat Object (APDO)</td></tr>
<tr><td>B29...28</td><td>00b – Programmable Power Supply
01b-11b - Reserved</td></tr>
<tr><td>B27...0</td><td>Specific Power Capabilities are described by the APDOs in the following sections.</td></tr>
</table>

Source: USB PD 3.0 specification.PDF
</td>
</tr>
<tr>
<td>determining whether the charger identification is in a list of charger identifications belonging to the plurality of authorized chargers;</td>
<td>The accused product practices determining whether the charger identification (e.g., specification revision value and capabilities of the charger as indicated in the Source_Capabilities message) is in a list of charger identifications belonging to the plurality of authorized chargers (e.g., specification revision values and source capabilities supported by the accused device).</td>
</tr>
</table>

EXHIBIT 2

An Attach event or a Hard Reset ***Shall*** cause the detection of the applicable Specification Revision to be performed for both Ports and Cable Plugs according to the rules stated below:

When the Source Port first communicates with the Sink Port the ***Specification Revision*** field ***Shall*** be used as described by the following steps:

1. The Source Port sends a ***Source Capabilities*** Message to the Sink Port setting the ***Specification Revision*** field to the highest Revision of the Power Delivery Specification the Source Port supports.
2. The Sink Port responds with a ***Request*** Message setting the ***Specification Revision*** field to the highest Revision of the Power Delivery Specification the Sink Port supports that is equal to or lower than the ***Specification Revision*** received from the Source Port.
3. The Source and Sink Ports ***Shall*** use the ***Specification Revision*** in the ***Request*** Message from the Sink in step 2 in all subsequent communications until a Detach, Hard Reset, or Error Recovery happens.

6.2.1.1.5 Specification Revision

The ***Specification Revision*** field ***Shall*** be one of the following values (except 11b):

- 00b –Revision 1.0
- 01b –Revision 2.0
- 10b – Revision 3.0
- 11b – ***Reserved***, ***Shall Not*** be used

To ensure interoperability with existing USBPD Products, USBPD Products ***Shall*** support every PD Specification Revision starting from ***[USBPD 2.0]*** for ***SOP****; the only exception to this is a VPD which ***Shall Ignore*** Messages sent with PD Specification Revision 2.0 and earlier.

EXHIBIT 2

	6.4.1.3 Sink Capabilities Message A Sink Port ***Shall*** report power levels it is able to operate at in a series of 32-bit Power Data Objects (see Table 6-7). These are returned as part of a ***Sink_Capabilities*** Message in response to a ***Get_Sink_Cap*** Message (see Figure 6-12). This is similar to that used for Source Port capabilities with equivalent Power Data Objects for Fixed, Variable and Battery Supplies as defined in this section. Power Data Objects are used to convey the Sink Port's operational power requirements including Dual-Role Power Ports presently operating as a Source. Each Power Data Object ***Shall*** describe a specific Sink operational power level, such as a Battery (e.g. 2.8-4.1V) or a fixed power supply (e.g. 12V). The ***Number of Data Objects*** field in the Message Header ***Shall*** define the number of Power Data Objects that follow the Message Header in a Data Message. All Sinks ***Shall*** minimally offer one Power Data Object with a power level at which the Sink can operate. A Sink ***Shall Not*** offer multiple Power Data Objects of the same type (fixed, variable, Battery) and the same voltage but ***Shall*** instead offer one Power Data Object with the highest available current for that Sink capability and voltage. All Sinks ***Shall*** include one Power Data Object that reports ***vSafe5V*** even if they require additional power to operate fully. In the case where additional power is required for full operation the Higher Capability bit ***Shall*** be set.

EXHIBIT 2

2.6.2 Sink Operation

- At Attach (no PD Connection or Contract):
  - Sink detects Source Attachment through the presence of ***vSafe5V***.
  - For a DRP that toggles the Port becomes a Sink Port on Attachment of a Source.
  - Once the Sink detects the presence of ***vSafe5V*** on V_{BUS} it waits for a ***Source_Capabilities*** Message indicating the presence of a PD capable Source.
  - If the Sink does not receive a ***Source_Capabilities*** Message within ***tTypeCSinkWaitCap*** then it issues ***Hard Reset*** Signaling in order to cause the Source Port to send a ***Source_Capabilities*** Message if the Source Port is PD capable.
  - The Sink does not generate SOP' or SOP'' Packets, is not required to detect SOP' or SOP'' Packets and does not recognize them.
- Establishing PD Connection (no PD Connection or Contract):
  - The Sink receives a ***Source_Capabilities*** Message and responds with a ***GoodCRC*** Message.
  - The Sink does not generate SOP' or SOP'' Packets, is not required to detect SOP' or SOP'' Packets and ***Discards*** them.
- Establishing Explicit Contract (PD Connection but no Explicit Contract or Implicit Contract after a Power Role Swap or Fast Role Swap):
  - The Sink receives a ***Source_Capabilities*** Message from the Source and responds with a ***Request*** Message. If this is a ***Valid*** request the Sink receives an ***Accept*** Message followed by a ***PS_RDY*** Message when the Source's power supply is ready to source power at the agreed level. At this point the Source and Sink have entered into an Explicit Contract:
    - The Sink Port may request one of the capabilities offered by the Source, even if this is the ***vSafe5V*** output offered by ***[USB 2.0]***, ***[USB 3.2]***, ***[USB Type-C 2.0]*** or ***[USBBC 1.2]***, in order to enable future power negotiation:
      - A Sink not requesting any capability with a ***Request*** Message results in an error.
    - A Sink unable to fully operate at the offered capabilities requests the default capability but indicates that it would prefer another power level and provide a physical indication of the failure to the end user (e.g. using an LED).
    - A Sink does not generate SOP' or SOP'' Packets, is not required to detect SOP' or SOP'' Packets and ***Discards*** them.

Source: USB PD 3.0 specification.PDF

EXHIBIT 2

	The accused product receives energy from a charger (e.g., authorized charger) which provides source capabilities and supported specification revision value. In case the charger doesn't provide a supported specification revision value, i.e., if the charger complies with USB PD 1.0, or the charger doesn't provide source capabilities requested by the accused device, the accused product will not consider the charger as an authorized charger and communication gets fail. The communication between charger and the accused product comes to a USB default operation at zero volts. 6.2.1.1.5 Specification Revision The *Specification Revision* field ***Shall*** be one of the following values (except 11b): • 00b –Revision 1.0 • 01b –Revision 2.0 • 10b – Revision 3.0 • 11b – ***Reserved, Shall Not*** be used To ensure interoperability with existing USBPD Products, USBPD Products ***Shall*** support every PD Specification Revision starting from *[USBPD 2.0]* for *SOP**; the only exception to this is a VPD which ***Shall Ignore*** Messages sent with PD Specification Revision 2.0 and earlier.

EXHIBIT 2

2.6.2 Sink Operation

- At Attach (no PD Connection or Contract):
  - Sink detects Source Attachment through the presence of ***vSafe5V***.
  - For a DRP that toggles the Port becomes a Sink Port on Attachment of a Source.
  - Once the Sink detects the presence of ***vSafe5V*** on V_{BUS} it waits for a ***Source_Capabilities*** Message indicating the presence of a PD capable Source.
  - If the Sink does not receive a ***Source_Capabilities*** Message within ***tTypeCSinkWaitCap*** then it issues ***Hard Reset*** Signaling in order to cause the Source Port to send a ***Source_Capabilities*** Message if the Source Port is PD capable.
  - The Sink does not generate SOP' or SOP'' Packets, is not required to detect SOP' or SOP'' Packets and does not recognize them.
- Establishing PD Connection (no PD Connection or Contract):
  - The Sink receives a ***Source_Capabilities*** Message and responds with a ***GoodCRC*** Message.
  - The Sink does not generate SOP' or SOP'' Packets, is not required to detect SOP' or SOP'' Packets and ***Discards*** them.
- Establishing Explicit Contract (PD Connection but no Explicit Contract or Implicit Contract after a Power Role Swap or Fast Role Swap):
  - The Sink receives a ***Source_Capabilities*** Message from the Source and responds with a ***Request*** Message. If this is a ***Valid*** request the Sink receives an ***Accept*** Message followed by a ***PS_RDY*** Message when the Source's power supply is ready to source power at the agreed level. At this point the Source and Sink have entered into an Explicit Contract:
    - The Sink Port may request one of the capabilities offered by the Source, even if this is the ***vSafe5V*** output offered by ***[USB 2.0]***, ***[USB 3.2]***, ***[USB Type-C 2.0]*** or ***[USBBC 1.2]***, in order to enable future power negotiation:
      - A Sink not requesting any capability with a ***Request*** Message results in an error.
    - A Sink unable to fully operate at the offered capabilities requests the default capability but indicates that it would prefer another power level and provide a physical indication of the failure to the end user (e.g. using an LED).
    - A Sink does not generate SOP' or SOP'' Packets, is not required to detect SOP' or SOP'' Packets and ***Discards*** them.

EXHIBIT 2

	8.3.3.2.8 PE_SRC_Capability_Response State The Policy Engine ***Shall*** enter the *PE_SRC_Capability_Response* state if there is a Request received from the Sink that cannot be met based on the present capabilities. When the present Contract is not within the present capabilities it is regarded as ***Invalid*** and a Hard Reset will be triggered. 7.1.5 Response to Hard Resets *Hard Reset* Signaling indicates a communication failure has occurred and the Source ***Shall*** stop driving VCONN, ***Shall*** remove Rp from the VCONN pin and ***Shall*** drive VBUS to *vSafe0V* as shown in Figure 7-10. The USB connection ***May*** reset during a Hard Reset since the VBUS voltage will be less than *vSafe5V* for an extended period of time. After establishing the *vSafe0V* voltage condition on VBUS, the Source ***Shall*** wait *tSrcRecover* before re-applying VCONN and restoring VBUS to *vSafe5V*. A Source ***Shall*** conform to the VCONN timing as specified in *[USB Type-C 2.0]*. Device operation during and after a Hard Reset is defined as follows: • Self-powered devices ***Should Not*** disconnect from USB during a Hard Reset (see Section 9.1.2). • Self-powered devices operating at more than *vSafe5V* ***May Not*** maintain full functionality after a *Hard Reset*. • Bus powered devices will disconnect from USB during a Hard Reset due to the loss of their power source. When a Hard Reset occurs the Source ***Shall*** stop driving VCONN, ***Shall*** remove Rp from the VCONN pin and ***Shall*** start to transition the VBUS voltage to *vSafe0V* either: • *tPSHardReset* after the last bit of the *Hard Reset* Signaling has been received from the Sink or • *tPSHardReset* after the last bit of the *Hard Reset* Signaling has been sent by the Source. The Source ***Shall*** meet both *tSafe5V* and *tSafe0V* relative to the start of the voltage transition as shown in Figure 7-10. *vSafe0V* — Safe operating voltage at "zero volts". *Source: USB PD 3.0 specification.PDF*
in response to determining that the charger identification is in the list of charger identifications:	The accused product practices the method such that in response to determining that the charger identification (e.g., identification information related to specification revision value as well as capabilities indicated in the Source_Capabilities message sent by the charger) is in a list of charger identifications (e.g., specification

EXHIBIT 2

receiving the energy from the charger;	revision values and capabilities supported by the accused device), it practices receiving the energy from the charger (e.g., USB PD compliant charger).

Battery

Battery capacity	4,750mAh (non-removable)
Talk time (hours)	Up to 23.05
Standby time (days)	Up to 18
Audio playback time (hours)	Speaker: Up to 24 Headset: Up to 30
Wireless charging capable	✓
Fast charging capable	✓
Time to charge to 50%	Up to 60 minutes
Time to charge to 100%	Up to 160 minutes

https://www.att.com/buy/prepaid-phones/att-radiant-max-5g-64gb-electric-blue-prepaid.html

EXHIBIT 2

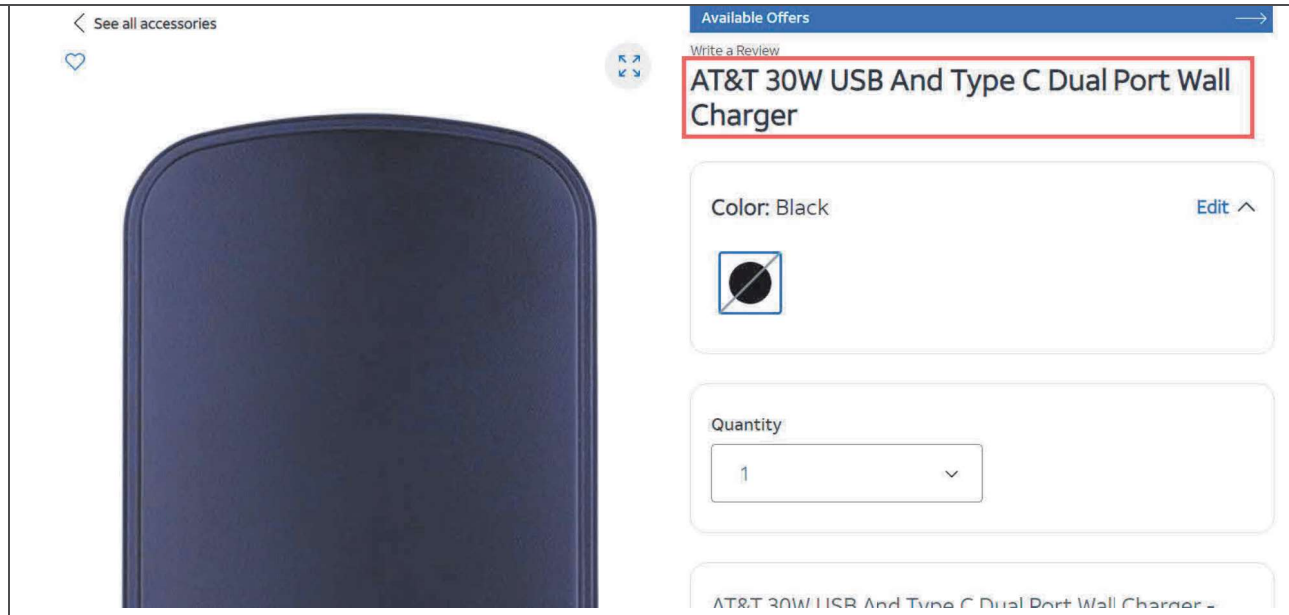

https://www.att.com/buy/accessories/Chargers/att-30w-usb-and-type-c-dual-port-wall-charger-black.html

EXHIBIT 2

Compatible Products

Alcatel

	AXEL		

Apple

iPhone SE 3rd Gen (2022)	iPhone 12 Pro Max	iPad Air 5th Gen (2022)	Watch Nike SE 40mm
iPhone 13 mini	iPhone 12 Pro	iPad Air (2020)	iPad 8th generation
iPhone 13 Pro Max	iPhone 12	iPad 9th Generation (2021)	Watch Series 6 44mm
iPhone 13 Pro	iPad mini (2021)	Watch SE 44mm	Watch Series 6 40mm
iPhone 13	iPad Pro 12.9-inch (2021)	Watch SE 40mm	Watch Nike Series 6 44mm
iPhone 12 mini	iPad Pro 11-inch (2021)	Watch Nike SE 44mm	Watch Nike Series 6 40mm

AT&T

RADIANT Max 5G	Fusion 5G	Unite Express 2	RADIANT Max
Global Modem USB800	Calypso 2	Turbo Hotspot 2	AT&T Fusion Z
	Calypso		

https://www.att.com/buy/accessories/Chargers/att-30w-usb-and-type-c-dual-port-wall-charger-black.html

EXHIBIT 2

Overview

Portable, lightweight wall charger delivers a powerful 30W charge to both a USB-A and USB-C charging port at once. AT&T's fast charge technology turns this wall charger into a safe and rapid charging hub. Charges compatible devices up to 70% faster than standard wall chargers and can get your device up to 50% charged in 30 minutes or less. Discrete LED indicator turns blue when fully charged. Power Delivery Output (USB-C): 5V/3A, 9V2A, 12V/1.5A. Standard USB-A Output: 5V/2.4A. USB Power Delivery 3.0 PPS Certified. Use with AT&T cables for best experience.

Key Features and specs:
Charges up to 70% faster than standard chargers
Charges up to 50% in 30 minutes
Charges 2 devices simultaneously with Single USB-C port + Single USB-A port
Foldable AC prongs
Total output: 30W rapidly charges most portable devices
Power Delivery Output (USB-C): 5V/3A, 9V2A, 12V/1.5A
USB Power Delivery 3.0 PPS Certified
Standard USB-A Output: 5V/2.4A

https://www.att.com/buy/accessories/Chargers/att-30w-usb-and-type-c-dual-port-wall-charger-black.html

An Attach event or a Hard Reset ***Shall*** cause the detection of the applicable Specification Revision to be performed for both Ports and Cable Plugs according to the rules stated below:

When the Source Port first communicates with the Sink Port the ***Specification Revision*** field ***Shall*** be used as described by the following steps:

1. The Source Port sends a ***Source Capabilities*** Message to the Sink Port setting the ***Specification Revision*** field to the highest Revision of the Power Delivery Specification the Source Port supports.
2. The Sink Port responds with a ***Request*** Message setting the ***Specification Revision*** field to the highest Revision of the Power Delivery Specification the Sink Port supports that is equal to or lower than the ***Specification Revision*** received from the Source Port.
3. The Source and Sink Ports ***Shall*** use the ***Specification Revision*** in the ***Request*** Message from the Sink in step 2 in all subsequent communications until a Detach, Hard Reset, or Error Recovery happens.

EXHIBIT 2

	6.4.1.3 Sink Capabilities Message A Sink Port ***Shall*** report power levels it is able to operate at in a series of 32-bit Power Data Objects (see Table 6-7). These are returned as part of a ***Sink_Capabilities*** Message in response to a ***Get_Sink_Cap*** Message (see Figure 6-12). This is similar to that used for Source Port capabilities with equivalent Power Data Objects for Fixed, Variable and Battery Supplies as defined in this section. Power Data Objects are used to convey the Sink Port's operational power requirements including Dual-Role Power Ports presently operating as a Source. Each Power Data Object ***Shall*** describe a specific Sink operational power level, such as a Battery (e.g. 2.8-4.1V) or a fixed power supply (e.g. 12V). The ***Number of Data Objects*** field in the Message Header ***Shall*** define the number of Power Data Objects that follow the Message Header in a Data Message. All Sinks ***Shall*** minimally offer one Power Data Object with a power level at which the Sink can operate. A Sink ***Shall Not*** offer multiple Power Data Objects of the same type (fixed, variable, Battery) and the same voltage but ***Shall*** instead offer one Power Data Object with the highest available current for that Sink capability and voltage. All Sinks ***Shall*** include one Power Data Object that reports ***vSafe5V*** even if they require additional power to operate fully. In the case where additional power is required for full operation the Higher Capability bit ***Shall*** be set.

EXHIBIT 2

2.6.2 Sink Operation

- At Attach (no PD Connection or Contract):
  - Sink detects Source Attachment through the presence of ***vSafe5V***.
  - For a DRP that toggles the Port becomes a Sink Port on Attachment of a Source.
  - Once the Sink detects the presence of ***vSafe5V*** on V_{BUS} it waits for a ***Source_Capabilities*** Message indicating the presence of a PD capable Source.
  - If the Sink does not receive a ***Source_Capabilities*** Message within ***tTypeCSinkWaitCap*** then it issues ***Hard Reset*** Signaling in order to cause the Source Port to send a ***Source_Capabilities*** Message if the Source Port is PD capable.
  - The Sink does not generate SOP' or SOP'' Packets, is not required to detect SOP' or SOP'' Packets and does not recognize them.
- Establishing PD Connection (no PD Connection or Contract):
  - The Sink receives a ***Source_Capabilities*** Message and responds with a ***GoodCRC*** Message.
  - The Sink does not generate SOP' or SOP'' Packets, is not required to detect SOP' or SOP'' Packets and ***Discards*** them.
- Establishing Explicit Contract (PD Connection but no Explicit Contract or Implicit Contract after a Power Role Swap or Fast Role Swap):
  - The Sink receives a ***Source_Capabilities*** Message from the Source and responds with a ***Request*** Message. If this is a ***Valid*** request the Sink receives an ***Accept*** Message followed by a ***PS_RDY*** Message when the Source's power supply is ready to source power at the agreed level. At this point the Source and Sink have entered into an Explicit Contract:
    - The Sink Port may request one of the capabilities offered by the Source, even if this is the ***vSafe5V*** output offered by ***[USB 2.0]***, ***[USB 3.2]***, ***[USB Type-C 2.0]*** or ***[USBBC 1.2]***, in order to enable future power negotiation:
      - A Sink not requesting any capability with a ***Request*** Message results in an error.
    - A Sink unable to fully operate at the offered capabilities requests the default capability but indicates that it would prefer another power level and provide a physical indication of the failure to the end user (e.g. using an LED).
    - A Sink does not generate SOP' or SOP'' Packets, is not required to detect SOP' or SOP'' Packets and ***Discards*** them.

Source: USB PD 3.0 specification.PDF

EXHIBIT 2

generating, using the converter, the power from the energy received from the charger;	The accused product practices generating, using the converter (e.g., converting power from USB to battery charging), the power from the energy received from the charger (e.g., USB PD charger).

Battery

Battery capacity	4,750mAh (non-removable)
Talk time (hours)	Up to 23.05
Standby time (days)	Up to 18
Audio playback time (hours)	Speaker: Up to 24 Headset: Up to 30
Wireless charging capable	✓
Fast charging capable	✓
Time to charge to 50%	Up to 60 minutes
Time to charge to 100%	Up to 160 minutes

https://www.att.com/buy/prepaid-phones/att-radiant-max-5g-64gb-electric-blue-prepaid.html

EXHIBIT 2



https://www.att.com/buy/accessories/Chargers/att-30w-usb-and-type-c-dual-port-wall-charger-black.html

EXHIBIT 2

Compatible Products

Alcatel

	AXEL		

Apple

iPhone SE 3rd Gen (2022)	iPhone 12 Pro Max	iPad Air 5th Gen (2022)	Watch Nike SE 40mm
iPhone 13 mini	iPhone 12 Pro	iPad Air (2020)	iPad 8th generation
iPhone 13 Pro Max	iPhone 12	iPad 9th Generation (2021)	Watch Series 6 44mm
iPhone 13 Pro	iPad mini (2021)	Watch SE 44mm	Watch Series 6 40mm
iPhone 13	iPad Pro 12.9-inch (2021)	Watch SE 40mm	Watch Nike Series 6 44mm
iPhone 12 mini	iPad Pro 11-inch (2021)	Watch Nike SE 44mm	Watch Nike Series 6 40mm

AT&T

RADIANT Max 5G	Fusion 5G	Unite Express 2	RADIANT Max
Global Modem USB800	Calypso 2	Turbo Hotspot 2	AT&T Fusion Z
	Calypso		

https://www.att.com/buy/accessories/Chargers/att-30w-usb-and-type-c-dual-port-wall-charger-black.html

EXHIBIT 2

	Overview Portable, lightweight wall charger delivers a powerful 30W charge to both a USB-A and USB-C charging port at once. AT&T's fast charge technology turns this wall charger into a safe and rapid charging hub. Charges compatible devices up to 70% faster than standard wall chargers and can get your device up to 50% charged in 30 minutes or less. Discrete LED indicator turns blue when fully charged. Power Delivery Output (USB-C): 5V/3A, 9V2A, 12V/1.5A. Standard USB-A Output: 5V/2.4A. USB Power Delivery 3.0 PPS Certified. Use with AT&T cables for best experience. Key Features and specs: Charges up to 70% faster than standard chargers Charges up to 50% in 30 minutes Charges 2 devices simultaneously with Single USB-C port + Single USB-A port Foldable AC prongs Total output: 30W rapidly charges most portable devices Power Delivery Output (USB-C): 5V/3A, 9V2A, 12V/1.5A USB Power Delivery 3.0 PPS Certified Standard USB-A Output: 5V/2.4A https://www.att.com/buy/accessories/Chargers/att-30w-usb-and-type-c-dual-port-wall-charger-black.html

EXHIBIT 2

	  https://www.att.com/buy/accessories/Chargers/att-30w-usb-and-type-c-dual-port-wall-charger-black.html

EXHIBIT 2

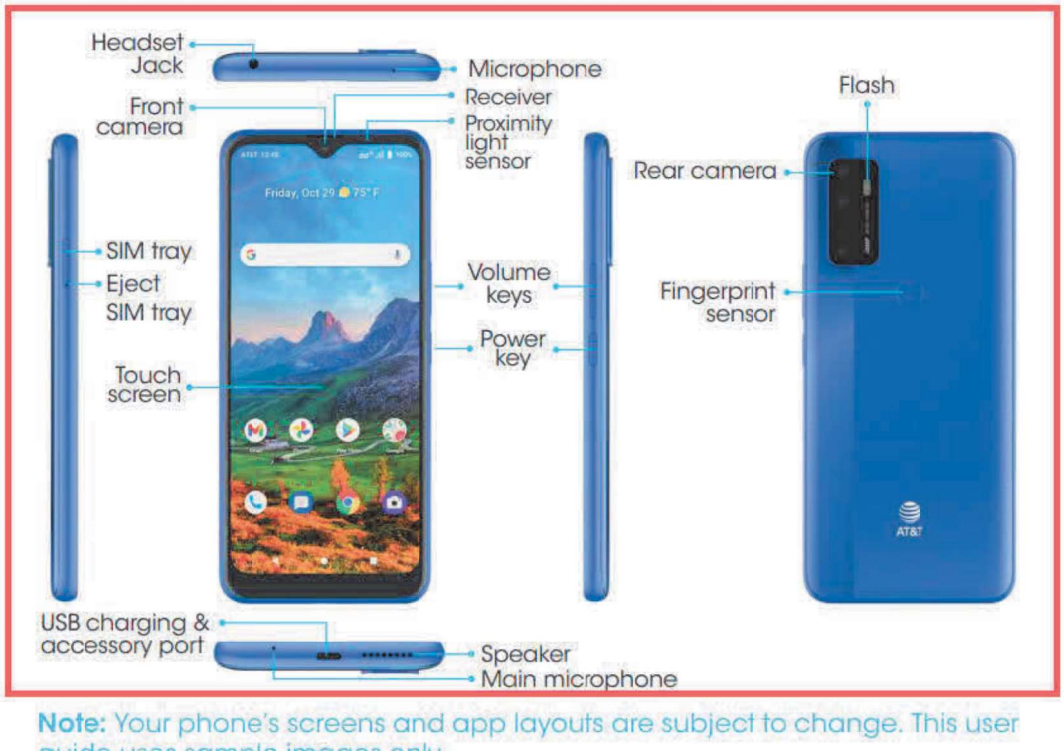

https://www.att.com/idpassets/images/support/device-support/ATT-RADIANTMax5G-EN-UG-INTERACTIVE.pdf

EXHIBIT 2

	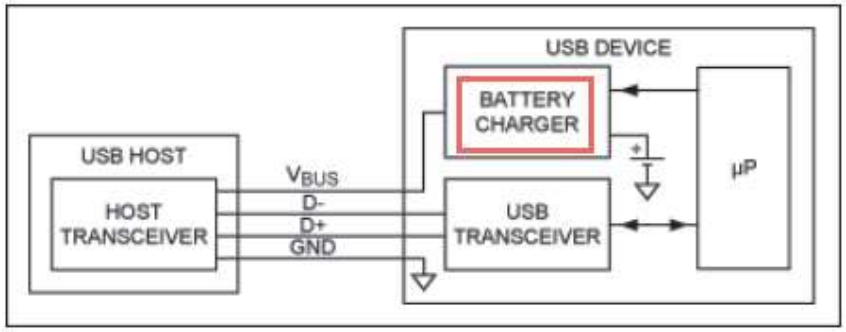 https://www.electronicproducts.com/the-basics-of-usb-battery-charging-a-survival-guide/#
charging the battery using the power received from the converter; and using the battery to power the electronic circuitry.	The accused product practices charging the battery (e.g., battery of the accused product) using the power received from the converter (e.g., converting power from USB to battery charging) and using the battery to power the electronic circuitry (e.g., camera, display, etc. of the accused product).

EXHIBIT 2

Battery

Battery capacity	4,750mAh (non-removable)
Talk time (hours)	Up to 23.05
Standby time (days)	Up to 18
Audio playback time (hours)	Speaker: Up to 24 Headset: Up to 30
Wireless charging capable	✓
Fast charging capable	✓
Time to charge to 50%	Up to 60 minutes
Time to charge to 100%	Up to 160 minutes

https://www.att.com/buy/prepaid-phones/att-radiant-max-5g-64gb-electric-blue-prepaid.html

EXHIBIT 2



https://www.att.com/buy/accessories/Chargers/att-30w-usb-and-type-c-dual-port-wall-charger-black.html

EXHIBIT 2

Compatible Products

Alcatel

	AXEL		

Apple

iPhone SE 3rd Gen (2022)	iPhone 12 Pro Max	iPad Air 5th Gen (2022)	Watch Nike SE 40mm
iPhone 13 mini	iPhone 12 Pro	iPad Air (2020)	iPad 8th generation
iPhone 13 Pro Max	iPhone 12	iPad 9th Generation (2021)	Watch Series 6 44mm
iPhone 13 Pro	iPad mini (2021)	Watch SE 44mm	Watch Series 6 40mm
iPhone 13	iPad Pro 12.9-inch (2021)	Watch SE 40mm	Watch Nike Series 6 44mm
iPhone 12 mini	iPad Pro 11-inch (2021)	Watch Nike SE 44mm	Watch Nike Series 6 40mm

AT&T

RADIANT Max 5G	Fusion 5G	Unite Express 2	RADIANT Max
Global Modem USB800	Calypso 2	Turbo Hotspot 2	AT&T Fusion Z
	Calypso		

https://www.att.com/buy/accessories/Chargers/att-30w-usb-and-type-c-dual-port-wall-charger-black.html

EXHIBIT 2

	Overview Portable, lightweight wall charger delivers a powerful 30W charge to both a USB-A and USB-C charging port at once. AT&T's fast charge technology turns this wall charger into a safe and rapid charging hub. Charges compatible devices up to 70% faster than standard wall chargers and can get your device up to 50% charged in 30 minutes or less. Discrete LED indicator turns blue when fully charged. Power Delivery Output (USB-C): 5V/3A, 9V2A, 12V/1.5A. Standard USB-A Output: 5V/2.4A. USB Power Delivery 3.0 PPS Certified. Use with AT&T cables for best experience. Key Features and specs: Charges up to 70% faster than standard chargers Charges up to 50% in 30 minutes Charges 2 devices simultaneously with Single USB-C port + Single USB-A port Foldable AC prongs Total output: 30W rapidly charges most portable devices Power Delivery Output (USB-C): 5V/3A, 9V2A, 12V/1.5A USB Power Delivery 3.0 PPS Certified Standard USB-A Output: 5V/2.4A https://www.att.com/buy/accessories/Chargers/att-30w-usb-and-type-c-dual-port-wall-charger-black.html

EXHIBIT 2

	  https://www.att.com/buy/accessories/Chargers/att-30w-usb-and-type-c-dual-port-wall-charger-black.html

EXHIBIT 2



https://www.att.com/idpassets/images/support/device-support/ATT-RADIANTMax5G-EN-UG-INTERACTIVE.pdf

EXHIBIT 2

	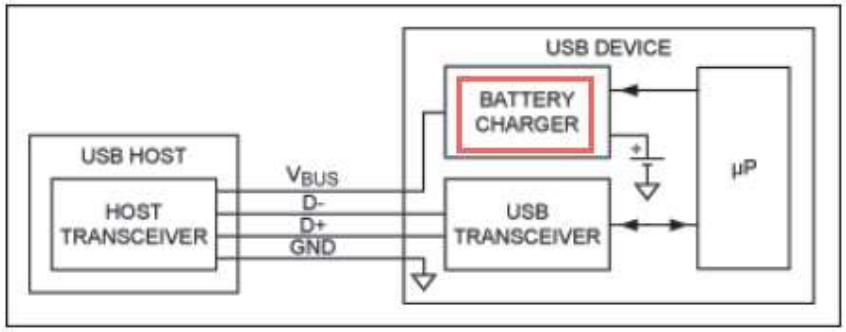 https://www.electronicproducts.com/the-basics-of-usb-battery-charging-a-survival-guide/# As shown below, the accused product comprises a rechargeable battery.

EXHIBIT 2

	(3) EUT Photo 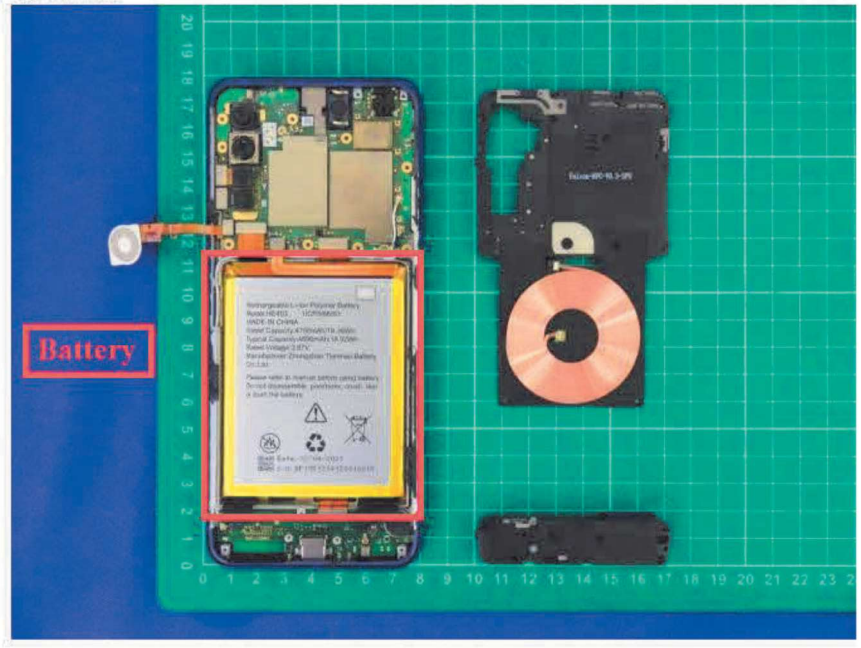 *Source: AT&T Radiant Max 5G internal image* As shown below, the accused product comprises Camera, display, etc. which are powered by the battery of the accused product.

EXHIBIT 2

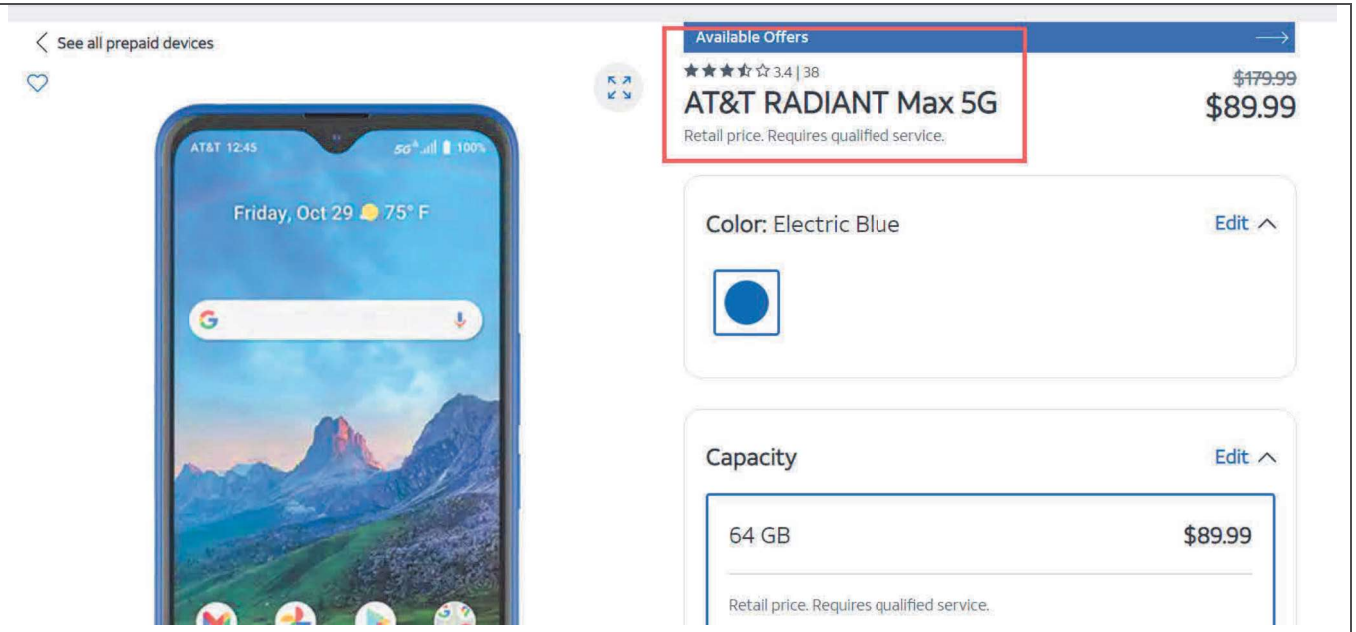

https://www.att.com/buy/prepaid-phones/att-radiant-max-5g-64gb-electric-blue-prepaid.html

EXHIBIT 2

	 https://www.att.com/buy/prepaid-phones/att-radiant-max-5g-64gb-electric-blue-prepaid.html

US010938246B2

(12) **United States Patent**
Moshfeghi

(10) **Patent No.: US 10,938,246 B2**
(45) **Date of Patent: *Mar. 2, 2021**

(54) **METHOD AND APPARATUS FOR CHARGING A BATTERY-OPERATED DEVICE**

(71) Applicant: **Golba LLC**, Rancho Palos Verdes, CA (US)

(72) Inventor: **Mehran Moshfeghi**, Rancho Palos Verdes, CA (US)

(73) Assignee: **Golba, LLC**, Rancho Palos Verdes, CA (US)

(*) Notice: Subject to any disclaimer, the term of this patent is extended or adjusted under 35 U.S.C. 154(b) by 0 days.

This patent is subject to a terminal disclaimer.

(21) Appl. No.: **16/793,910**

(22) Filed: **Feb. 18, 2020**

(65) **Prior Publication Data**

US 2020/0185971 A1 Jun. 11, 2020

Related U.S. Application Data

(63) Continuation of application No. 16/436,824, filed on Jun. 10, 2019, now abandoned, which is a

(Continued)

(51) **Int. Cl.**

H02J 7/00	(2006.01)
H02J 50/12	(2016.01)
H02J 50/90	(2016.01)
H02J 50/80	(2016.01)
H04B 1/3827	(2015.01)
H02J 50/20	(2016.01)

(Continued)

(52) **U.S. Cl.**

CPC ***H02J 50/12*** (2016.02); ***H02J 7/025*** (2013.01); ***H02J 50/20*** (2016.02); ***H02J 50/80*** (2016.02); ***H02J 50/90*** (2016.02); ***H04B 1/3838*** (2013.01); *H01Q 3/005* (2013.01); *H04B 7/26* (2013.01)

(58) **Field of Classification Search**

CPC H02J 50/12
USPC 320/108
See application file for complete search history.

(56) **References Cited**

U.S. PATENT DOCUMENTS

5,504,415 A * 4/1996 Podrazhansky H02J 7/0016 320/118
5,528,122 A * 6/1996 Sullivan H02J 7/0018 320/118

(Continued)

Primary Examiner — Yalkew Fantu
(74) *Attorney, Agent, or Firm* — Farjami & Farjami LLP

(57) **ABSTRACT**

There is provided a battery-operated device that include a battery, an electronic circuitry configured to be powered by the battery, and a converter configured to receive energy from any of a plurality of authorized chargers, and generate power from the energy for charging the battery using the power. The battery-operated device is configured to receive a charger identification from a charger, and determine whether the charger identification is in a list of charger identifications belonging to the plurality of authorized chargers. The battery-operated device is further configured to, in response to determining that the charger identification is in the list of charger identifications receive the energy from the charger, generate, using the converter, the power from the energy received from the charger, charge the battery using the power received from the converter, and use the battery to power the electronic circuitry.

20 Claims, 24 Drawing Sheets

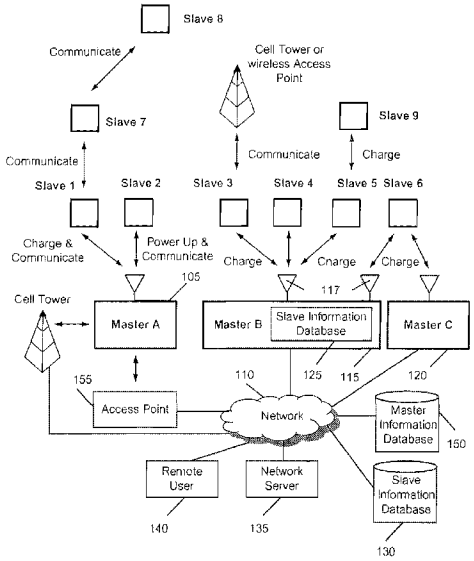

Related U.S. Application Data

continuation of application No. 15/610,379, filed on May 31, 2017, now Pat. No. 10,355,531, which is a continuation of application No. 15/263,629, filed on Sep. 13, 2016, now Pat. No. 9,847,670, which is a continuation of application No. 14/223,841, filed on Mar. 24, 2014, now Pat. No. 9,608,472, which is a continuation of application No. 12/979,254, filed on Dec. 27, 2010, now Pat. No. 8,686,685.

(60) Provisional application No. 61/290,184, filed on Dec. 25, 2009.

(51) **Int. Cl.**

H02J 7/02	(2016.01)
H01Q 3/00	(2006.01)
H04B 7/26	(2006.01)

(56) **References Cited**

U.S. PATENT DOCUMENTS

6,867,567	B2 *	3/2005	Yokota	H02J 7/0047 320/134
2004/0135544	A1 *	7/2004	King	B60L 53/11 320/116
2004/0135546	A1 *	7/2004	Chertok	B60L 58/22 320/118
2011/0127953	A1 *	6/2011	Walley	H02J 7/025 320/108

* cited by examiner

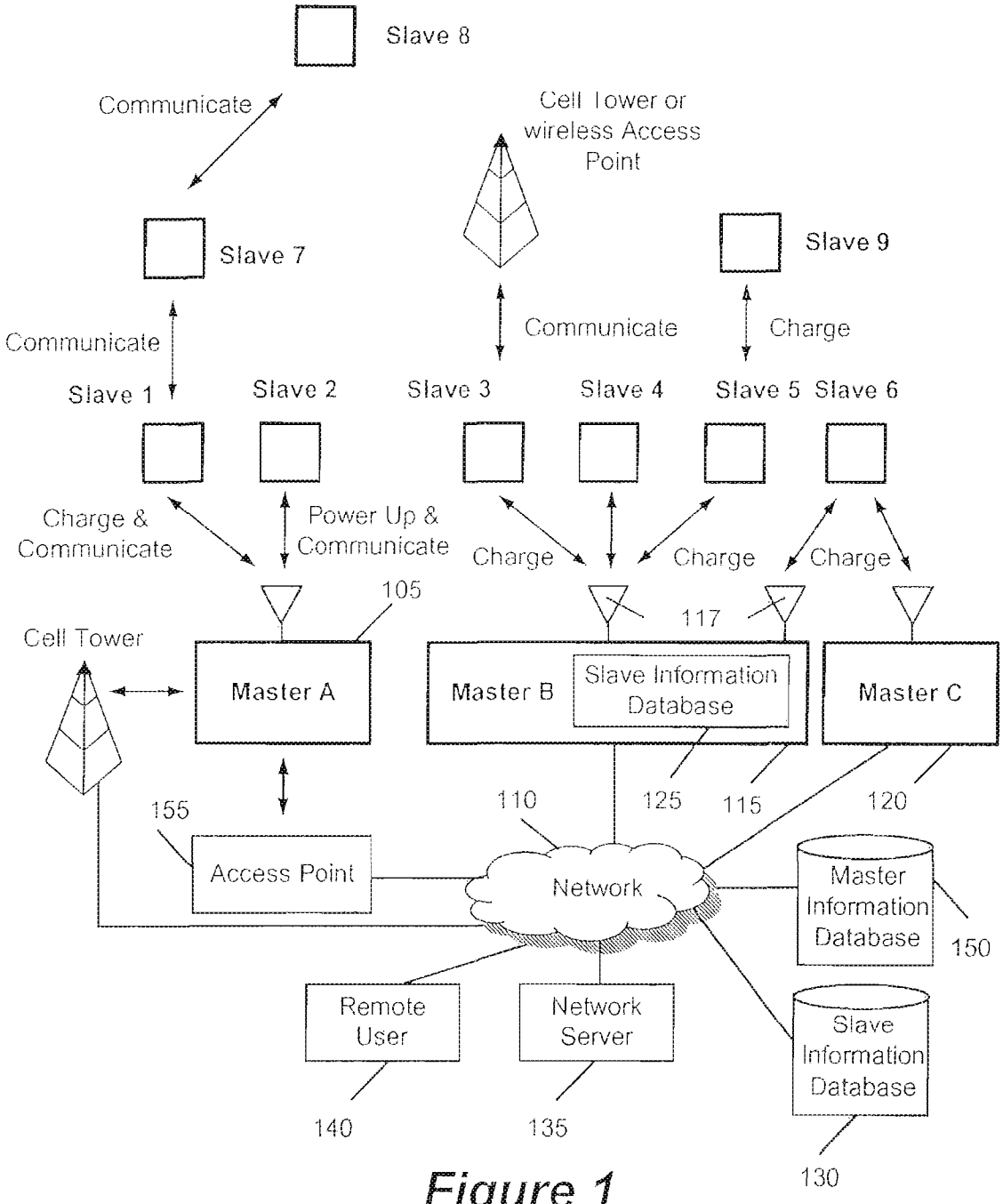
Slave 8
Communicate
Cell Tower or wireless Access Point
Slave 7
Slave 9
Communicate
Communicate
Charge
Slave 1
Slave 2
Slave 3
Slave 4
Slave 5
Slave 6
Charge & Communicate
Power Up & Communicate
Charge
Charge
Charge
105
117
Cell Tower
Master A
Master B
Slave Information Database
Master C
155
110
125
115
120
Access Point
Network
Master Information Database
150
Remote User
Network Server
Slave Information Database
140
135
130

Figure 1

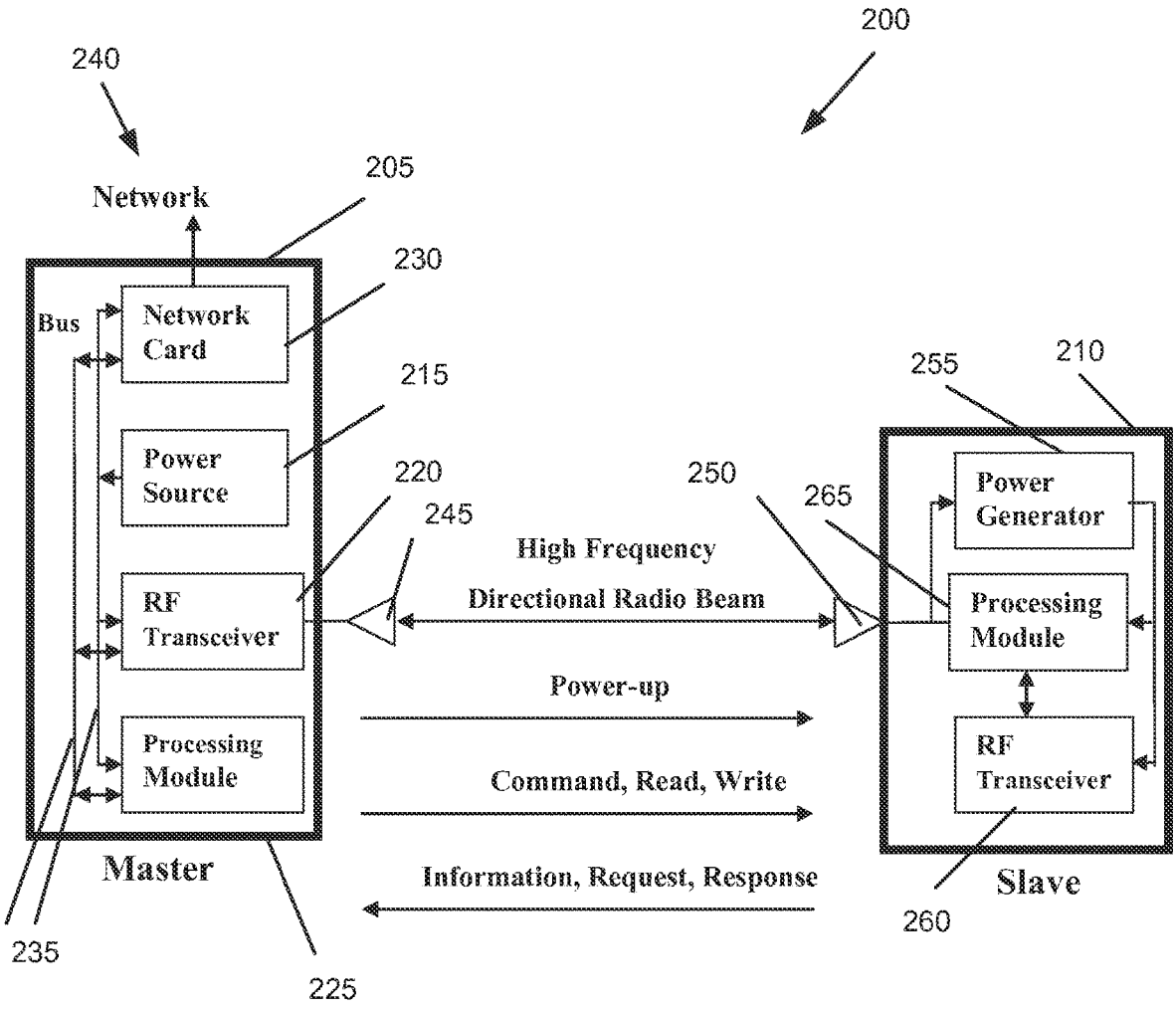
200
240
Network
205
230
Bus
Network Card
215
Power Source
220
245
RF Transceiver
Processing Module
Master
235
225
High Frequency
Directional Radio Beam
Power-up
Command, Read, Write
Information, Request, Response
250
265
255
210
Power Generator
Processing Module
RF Transceiver
Slave
260

Figure 2

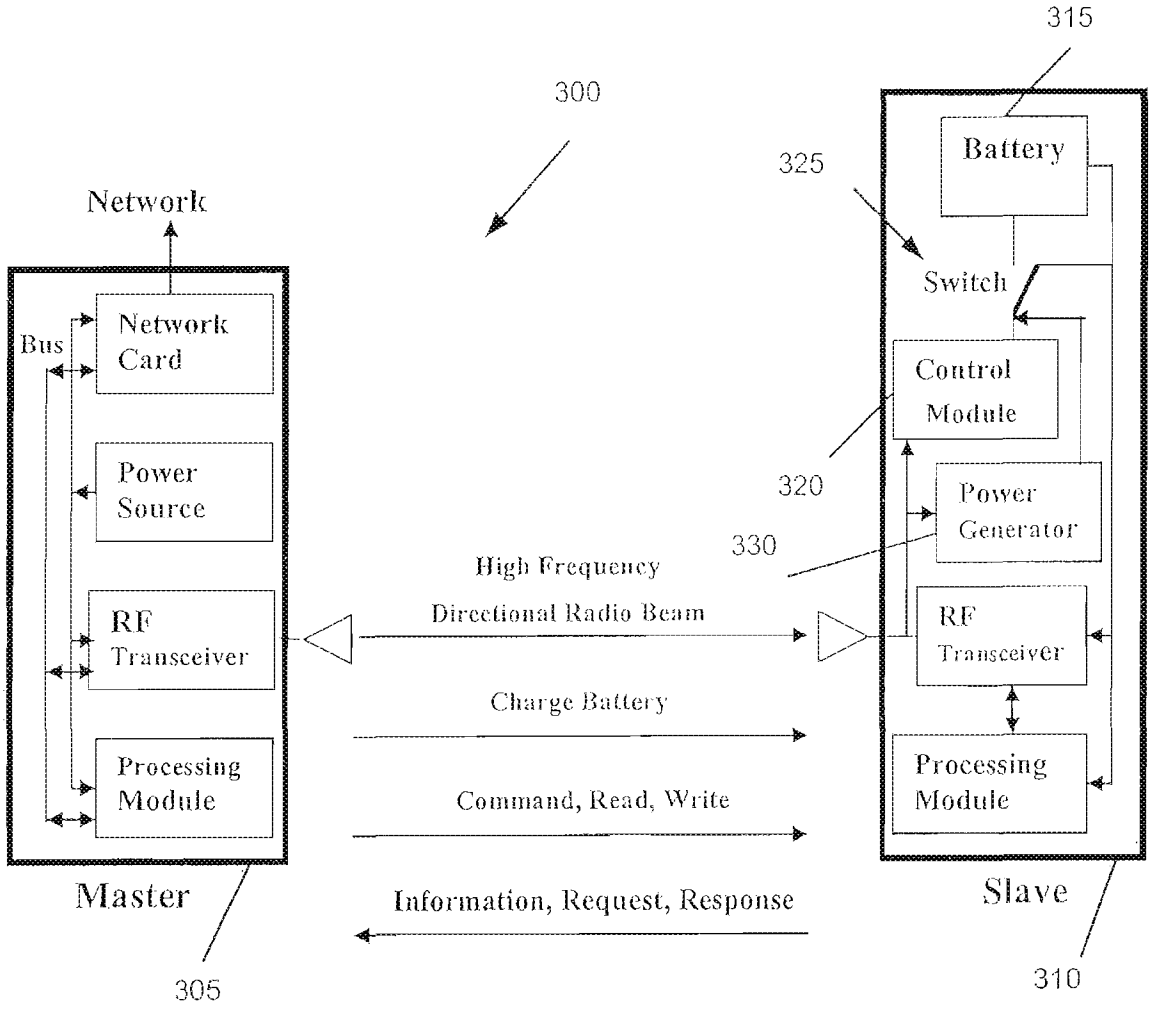
300
315
Battery
325
Switch
Network
Bus
Network Card
Power Source
RF Transceiver
Processing Module
Control Module
320
Power Generator
330
High Frequency
Directional Radio Beam
RF Transceiver
Charge Battery
Command, Read, Write
Information, Request, Response
Processing Module
Master
Slave
305
310

Figure 3

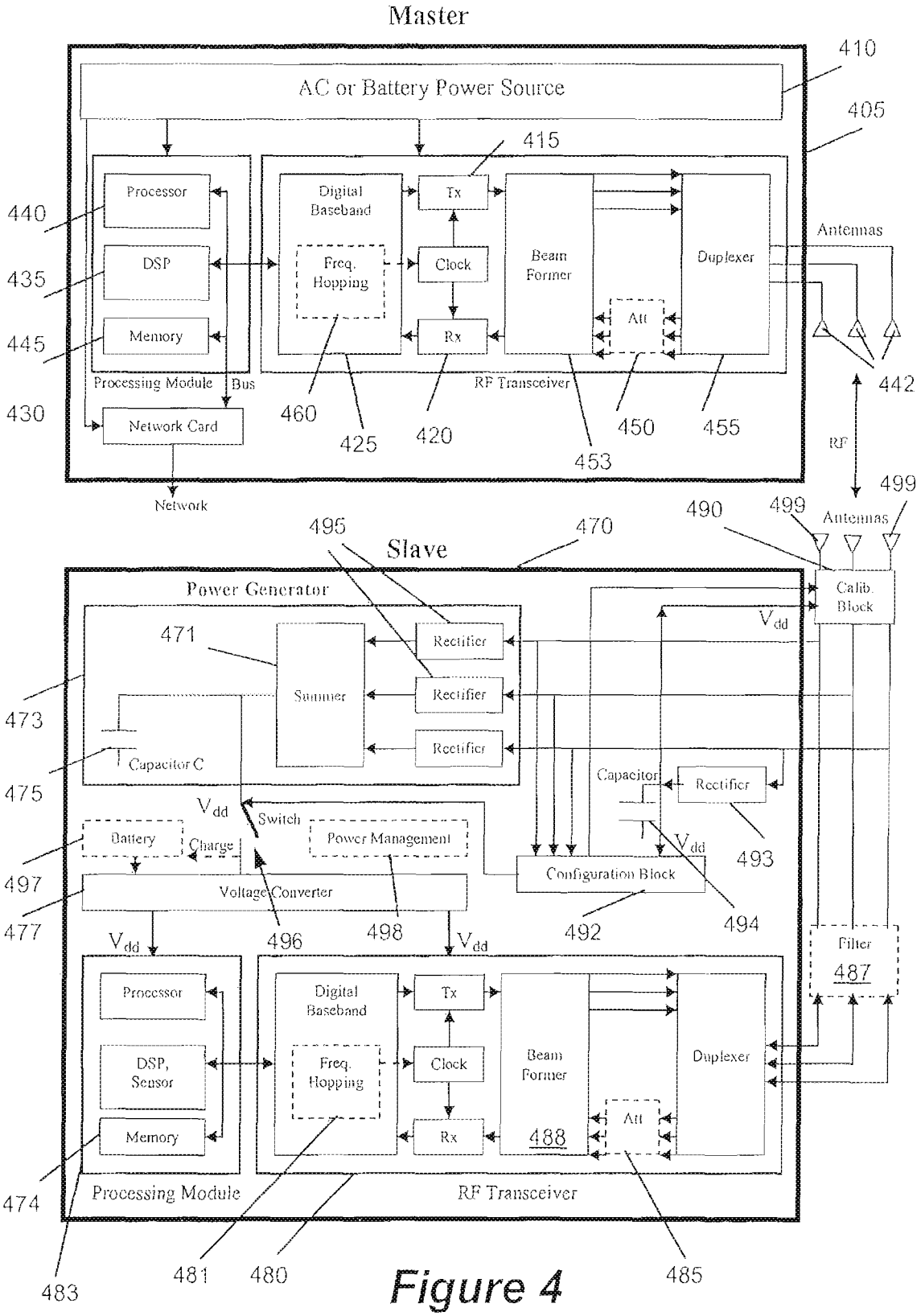
Master
AC or Battery Power Source
410
405
415
Processor
DSP
Memory
Processing Module
Bus
Network Card
Network
Digital Baseband
Freq. Hopping
Tx
Clock
Rx
Beam Former
Att
Duplexer
RF Transceiver
Antennas
RF
440
435
445
430
460
425
420
453
450
455
442
499
490
Slave
495
470
Power Generator
471
Summer
Rectifier
Rectifier
Rectifier
Capacitor C
473
475
Vdd
Switch
Battery
Charge
Power Management
Voltage Converter
497
477
496
498
Calib. Block
Capacitor
Rectifier
493
Configuration Block
492
494
Filter
487
Processor
DSP, Sensor
Memory
Processing Module
Digital Baseband
Freq. Hopping
Tx
Clock
Rx
Beam Former
488
Att
Duplexer
RF Transceiver
474
483
481
480
485

Figure 4

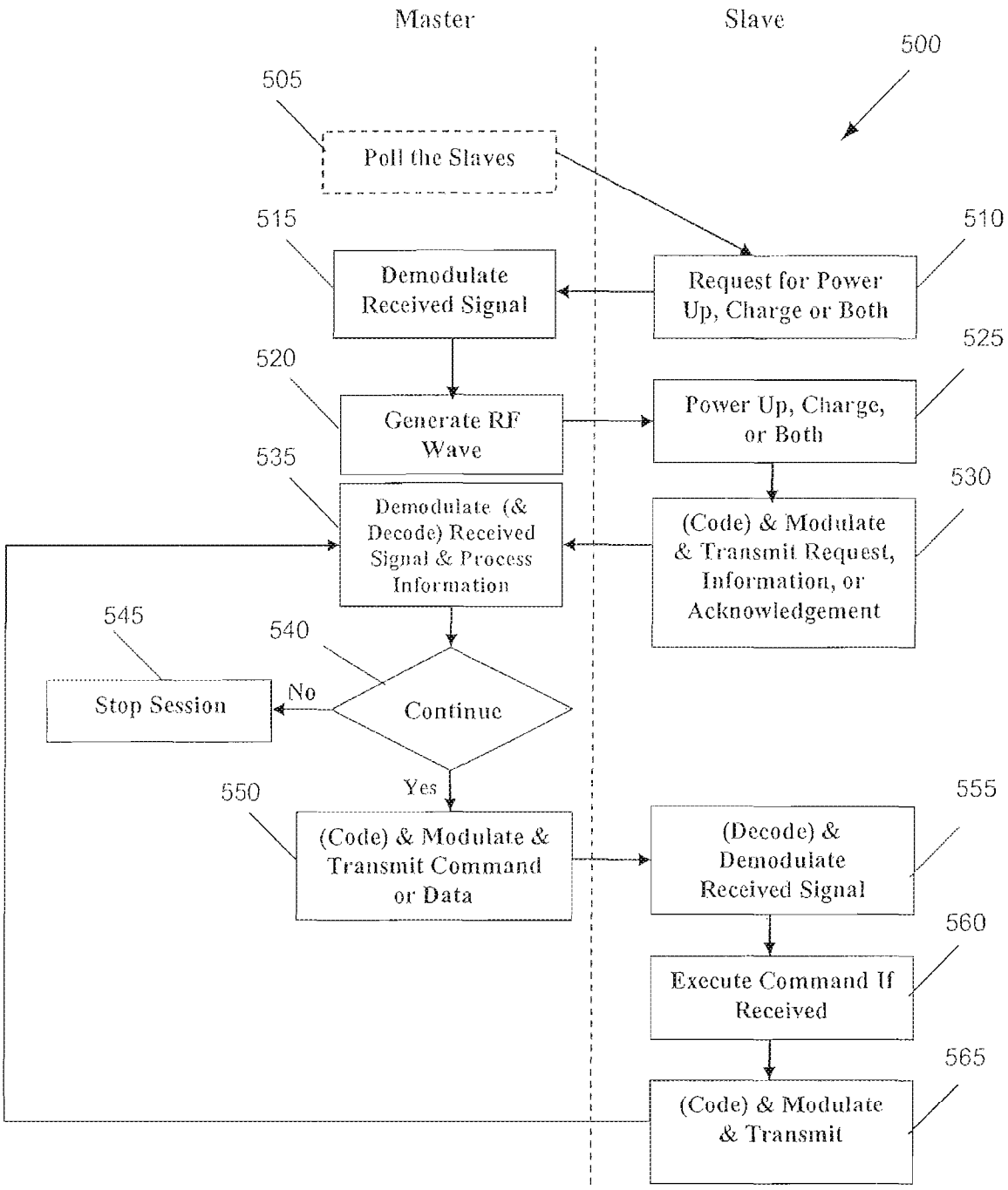
Master
Slave
500
505
Poll the Slaves
515
Demodulate Received Signal
510
Request for Power Up, Charge or Both
520
Generate RF Wave
525
Power Up, Charge, or Both
535
Demodulate (& Decode) Received Signal & Process Information
530
(Code) & Modulate & Transmit Request, Information, or Acknowledgement
545
Stop Session
540
No
Continue
Yes
550
(Code) & Modulate & Transmit Command or Data
555
(Decode) & Demodulate Received Signal
560
Execute Command If Received
565
(Code) & Modulate & Transmit

Figure 5

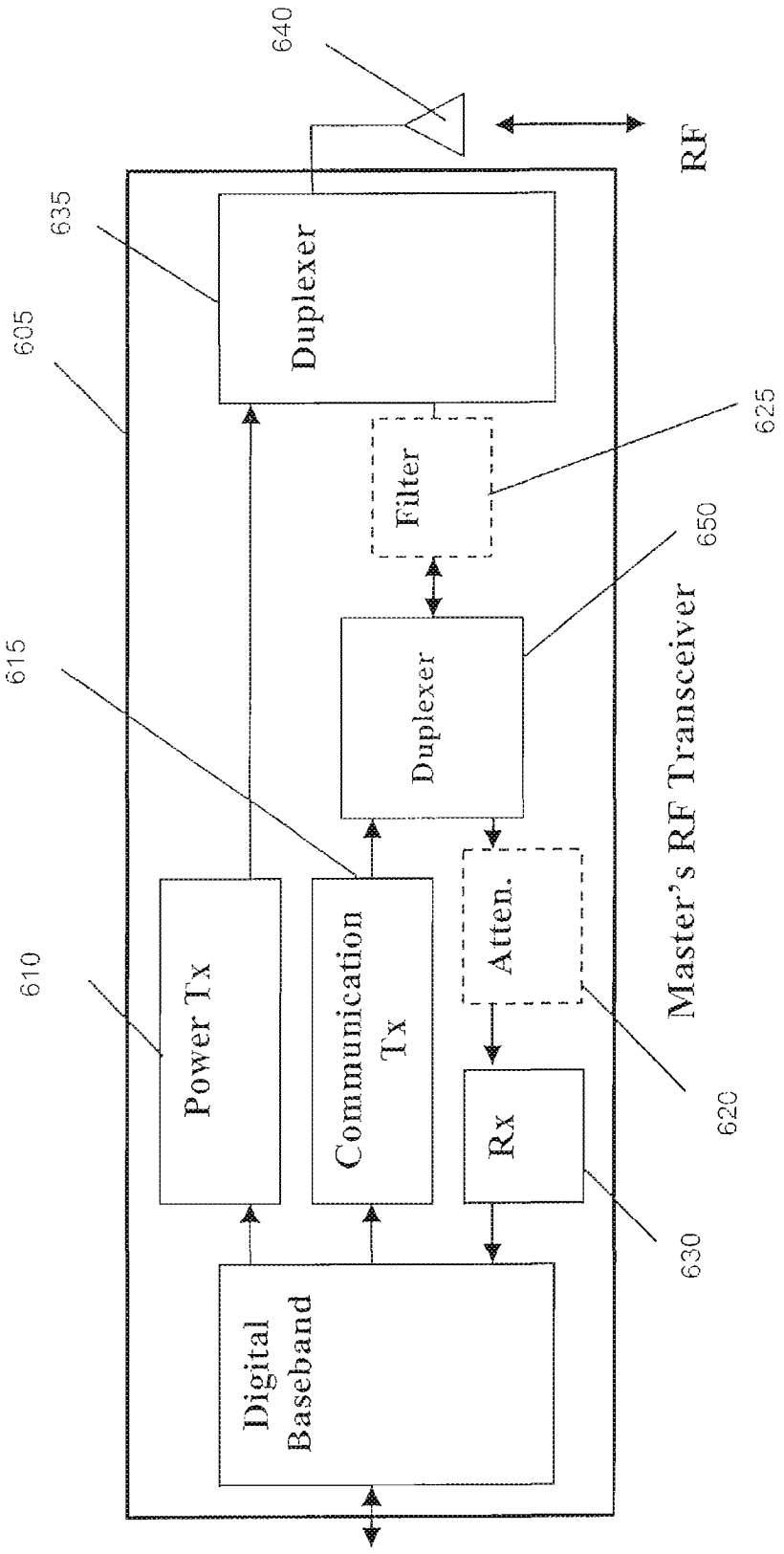
640
RF
635
605
Duplexer
625
Filter
650
615
Duplexer
Master's RF Transceiver
610
Power Tx
Communication Tx
Atten.
620
Rx
630
Digital Baseband

Figure 6

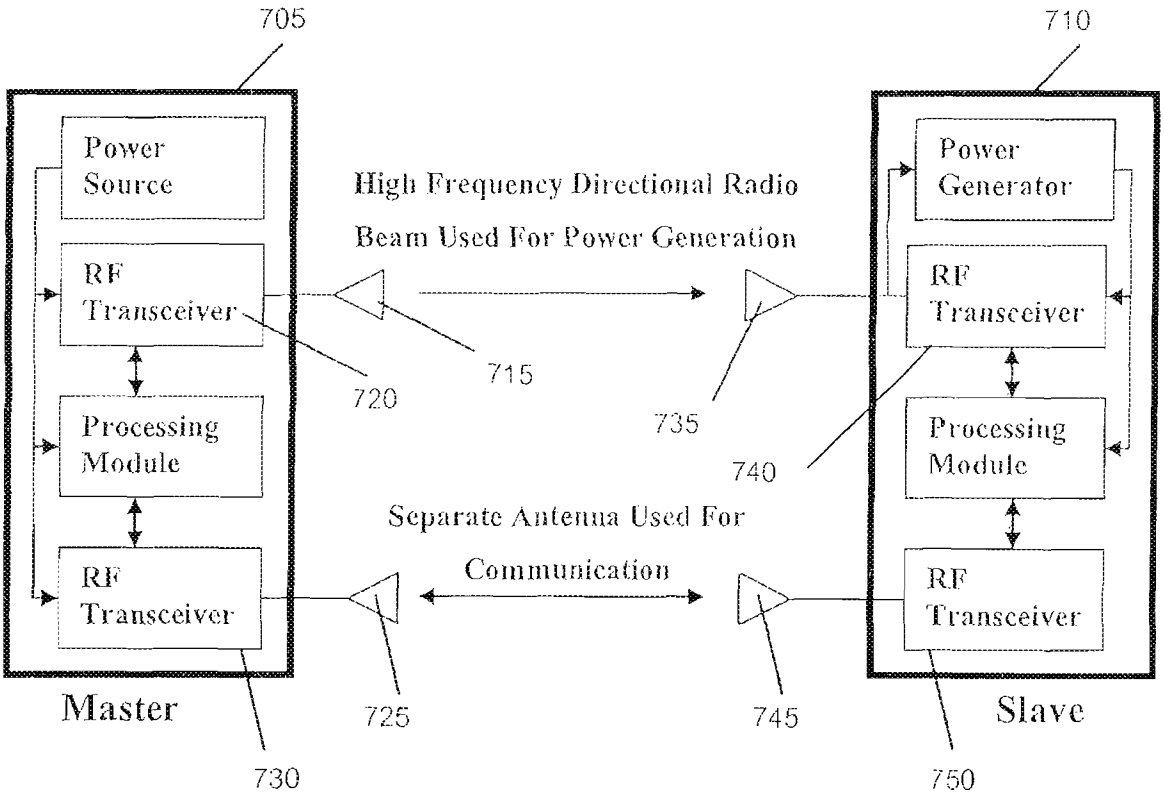
705
710
Power Source
RF Transceiver
Processing Module
RF Transceiver
Master
High Frequency Directional Radio Beam Used For Power Generation
Separate Antenna Used For Communication
Power Generator
RF Transceiver
Processing Module
RF Transceiver
Slave
715
720
735
740
725
745
730
750

Figure 7

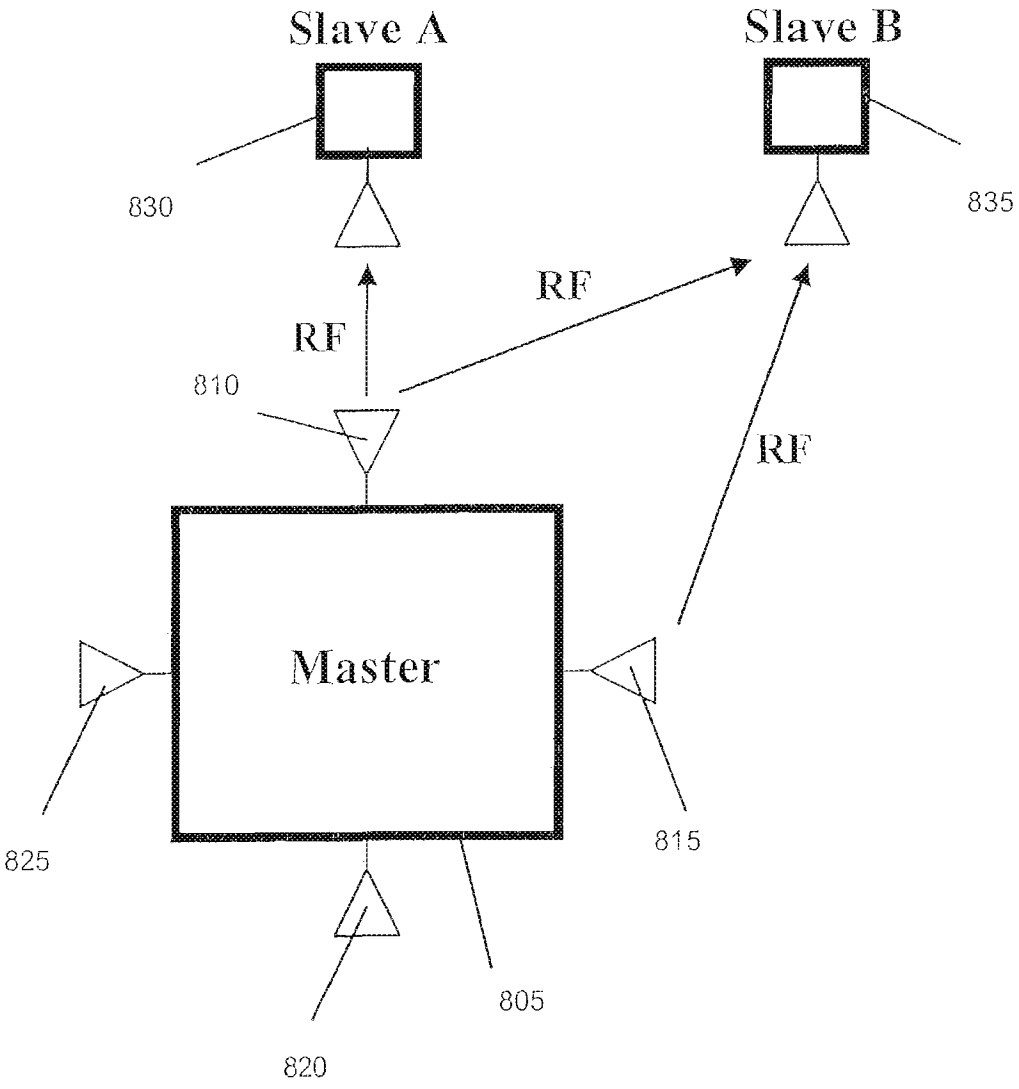

Figure 8

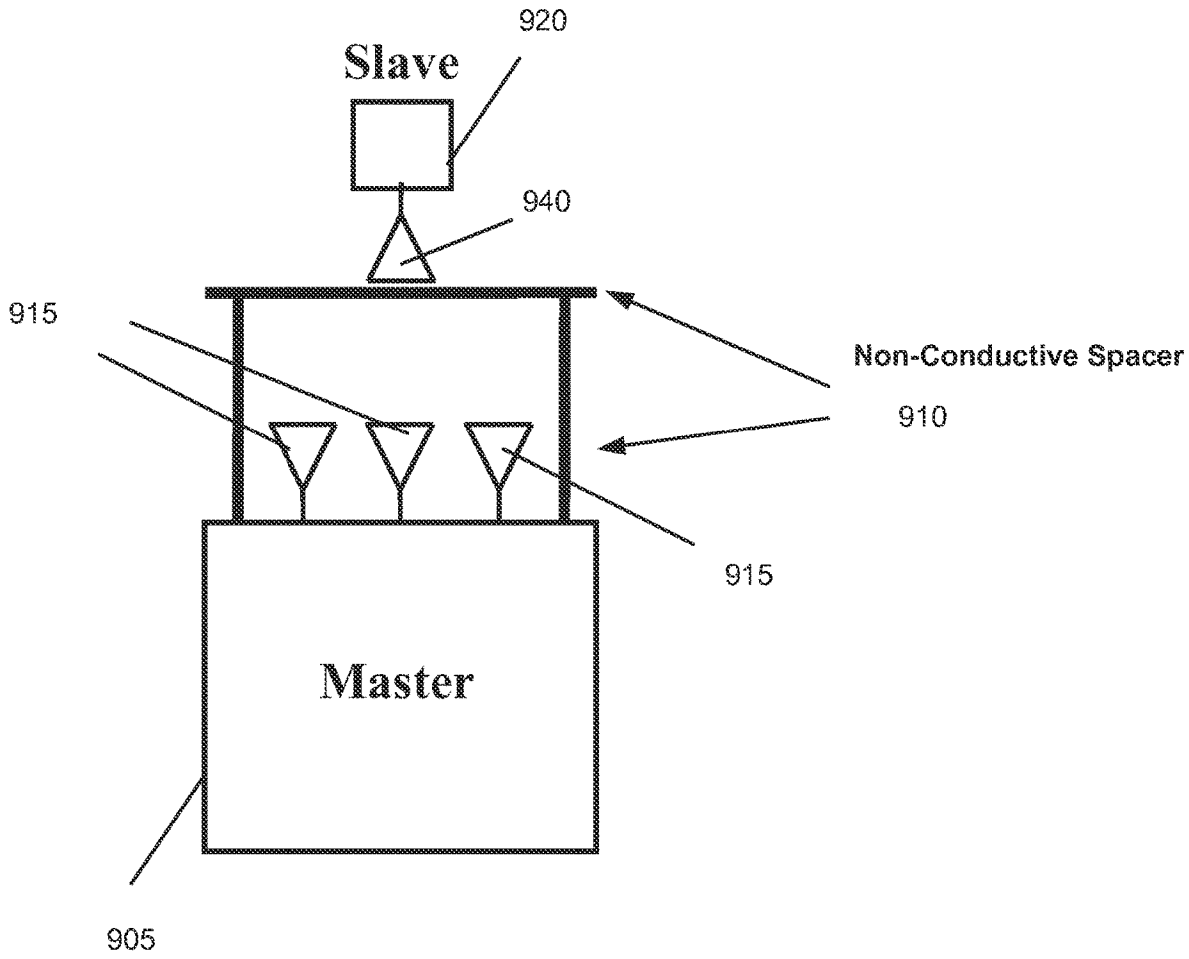

Figure 9

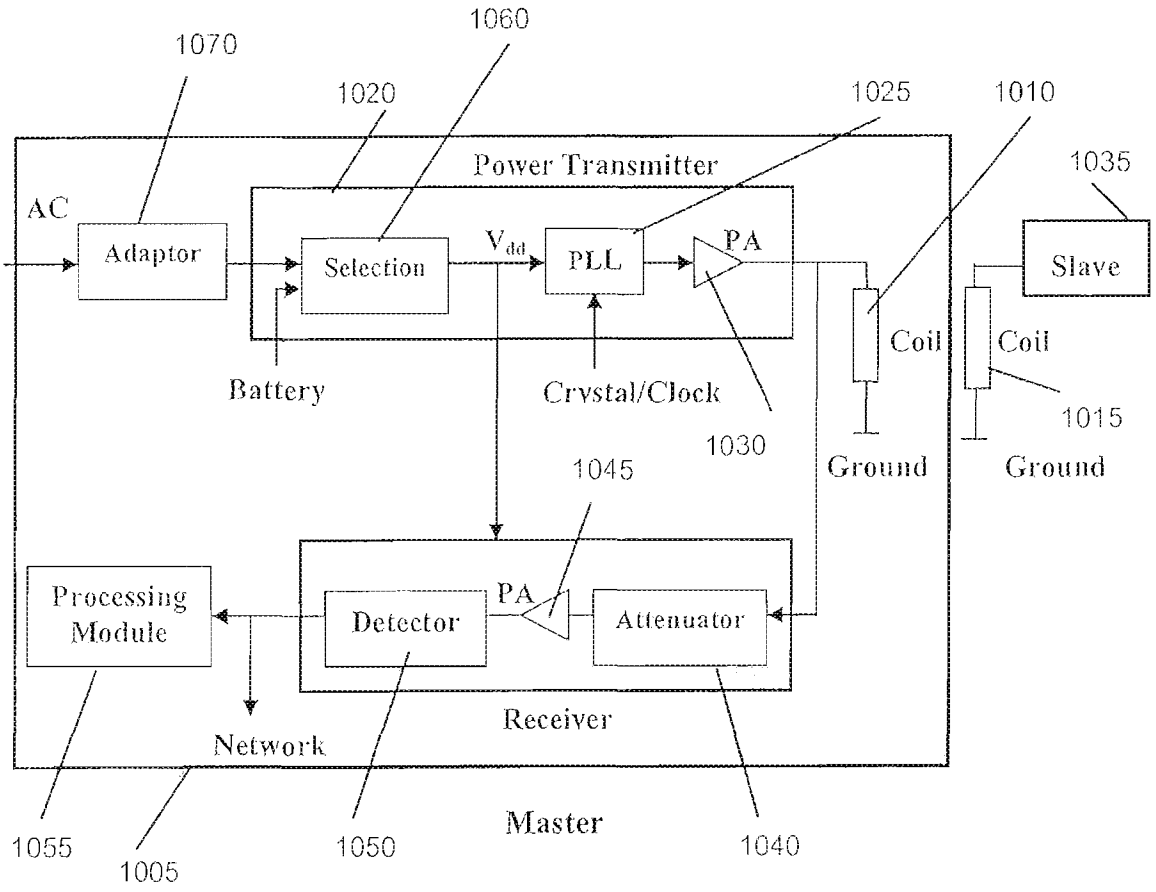
1070
1060
1020
1025
1010
1035
Power Transmitter
AC
Adaptor
Selection
V_{dd}
PLL
PA
Slave
Coil
Coil
Battery
Crystal/Clock
1015
1030
Ground
Ground
1045
Processing Module
Detector
PA
Attenuator
Receiver
Network
Master
1055
1005
1050
1040

Figure 10

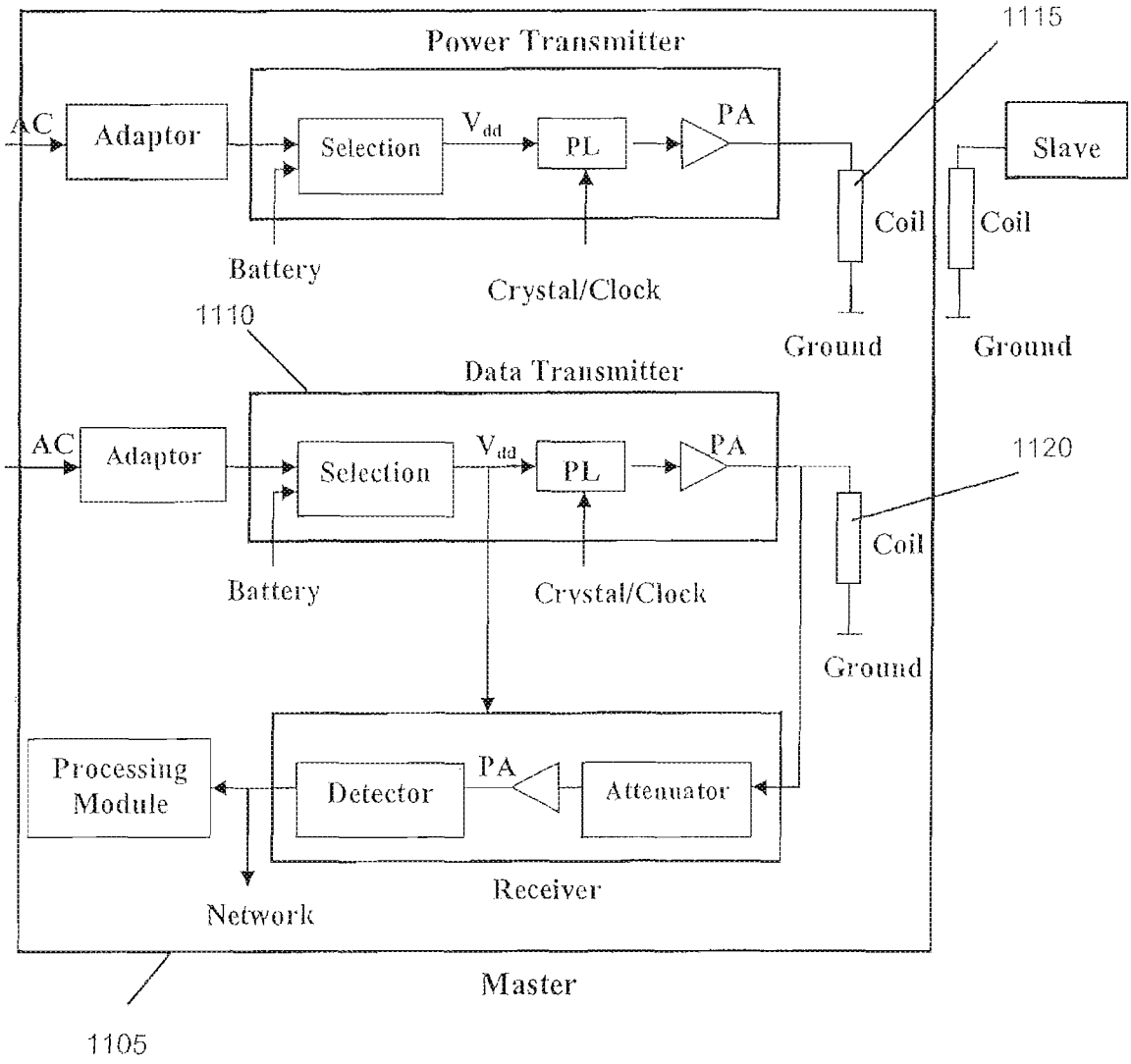
Power Transmitter
1115
AC
Adaptor
Selection
V_{dd}
PL
PA
Slave
Coil
Coil
Battery
Crystal/Clock
1110
Ground
Ground
Data Transmitter
AC
Adaptor
Selection
V_{dd}
PL
PA
1120
Coil
Battery
Crystal/Clock
Ground
Processing Module
Detector
PA
Attenuator
Receiver
Network
Master
1105

Figure 11

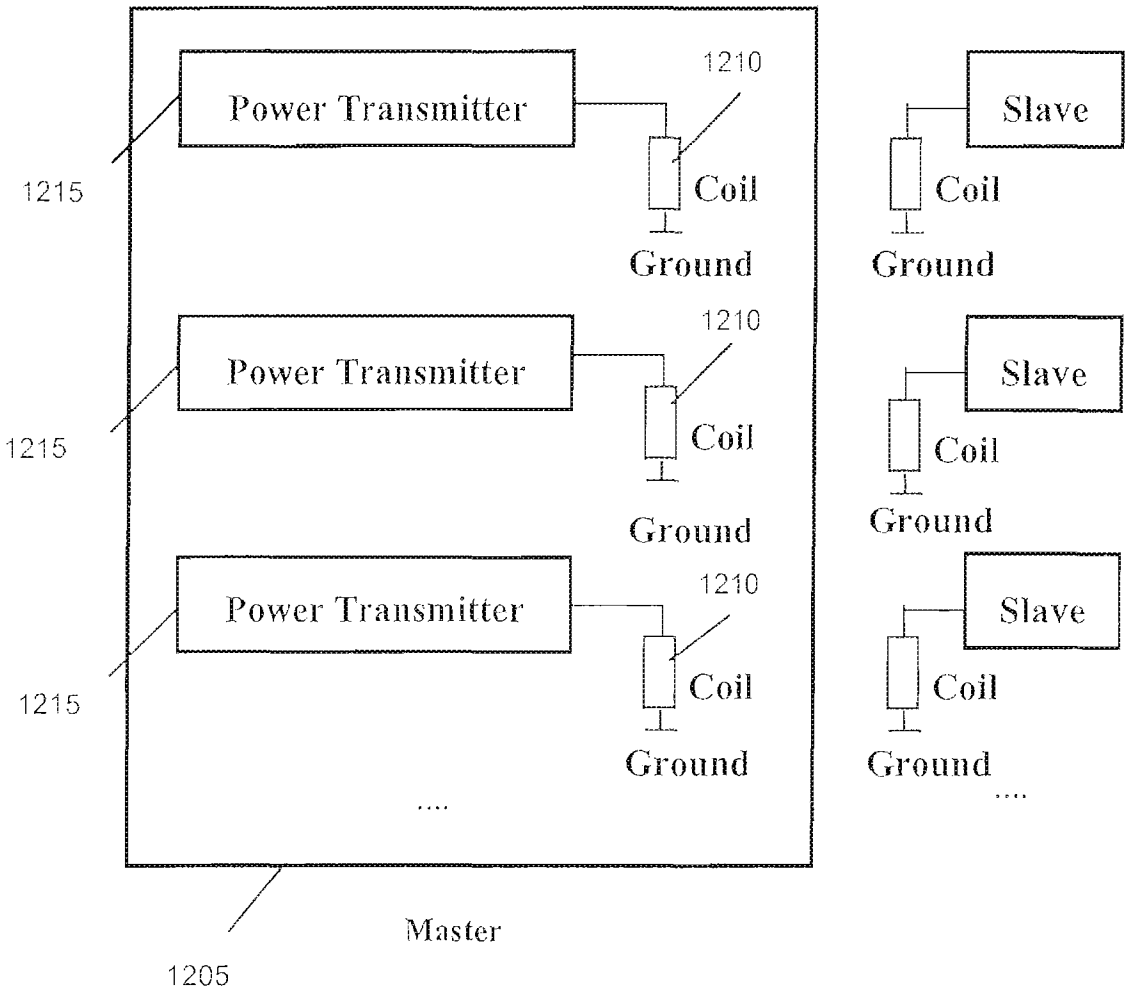
Power Transmitter
1210
Coil
Ground
Slave
Coil
Ground
1215
Power Transmitter
1210
Coil
Ground
Slave
Coil
Ground
1215
Power Transmitter
1210
Coil
Ground
Slave
Coil
Ground
1215
....
....
Master
1205

Figure 12

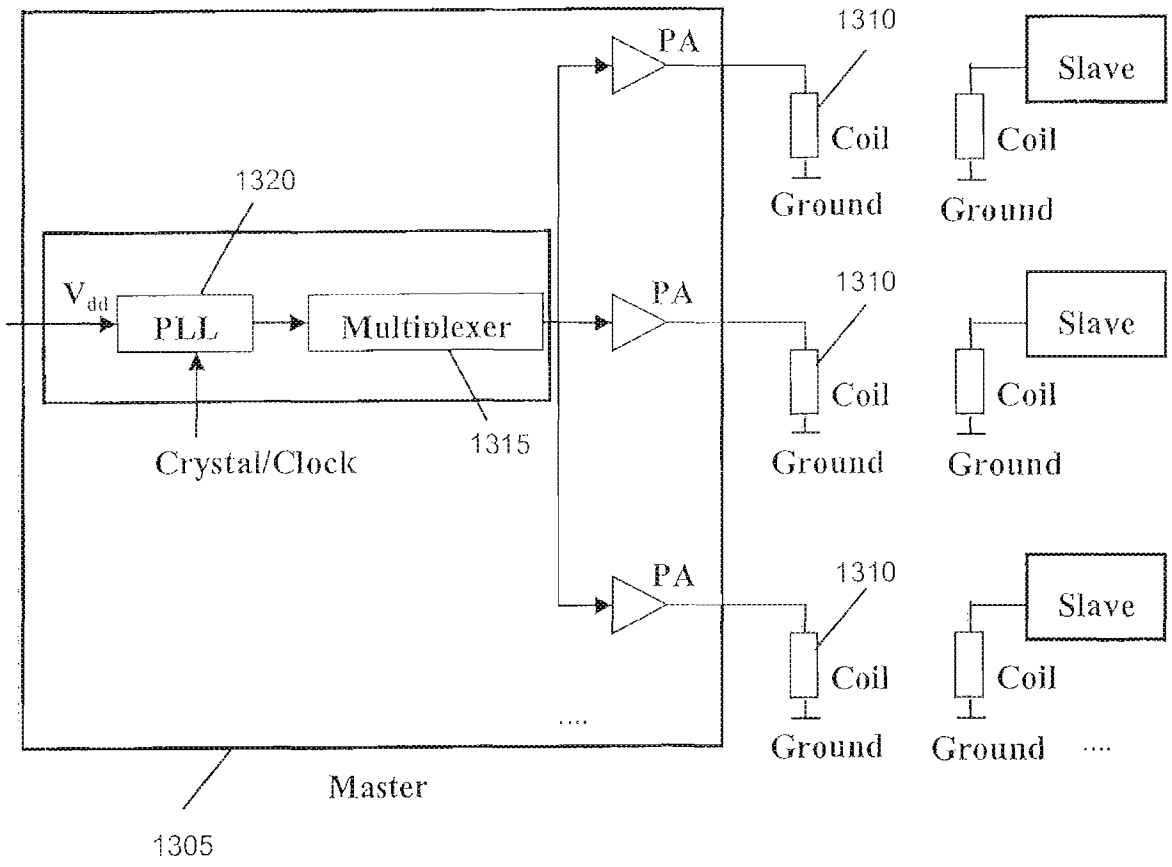
1310
PA
Slave
Coil
Coil
Ground
Ground
1320
V_{dd}
PLL
Multiplexer
PA
1310
Slave
Coil
Coil
Ground
Ground
Crystal/Clock
1315
PA
1310
Slave
Coil
Coil
Ground
Ground
....
Master
1305

Figure 13

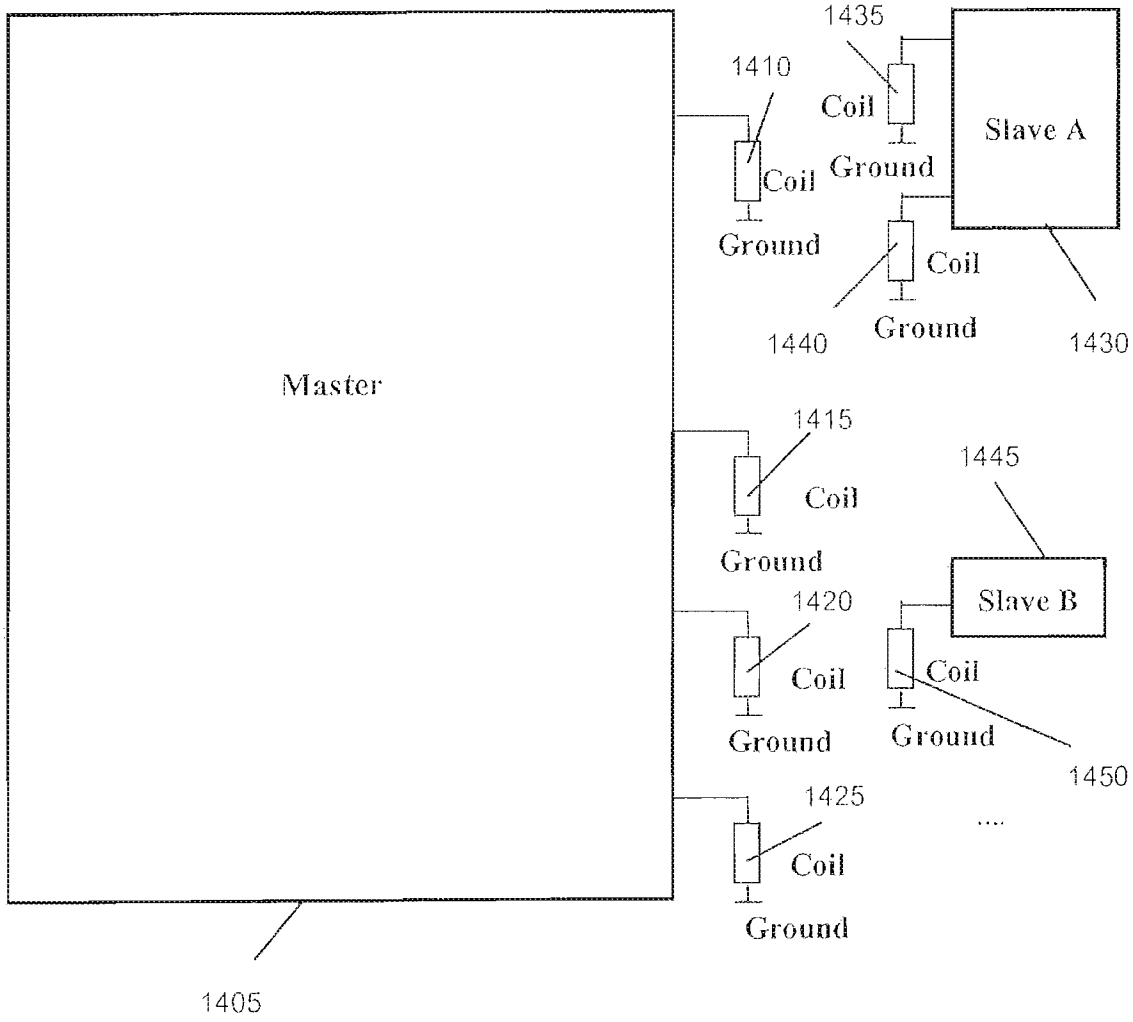
Master
1405
1410
Coil
Ground
1415
Coil
Ground
1420
Coil
Ground
1425
Coil
Ground
1435
Coil
Ground
Slave A
1430
1440
Coil
Ground
1445
Slave B
Coil
Ground
1450
....

Figure 14

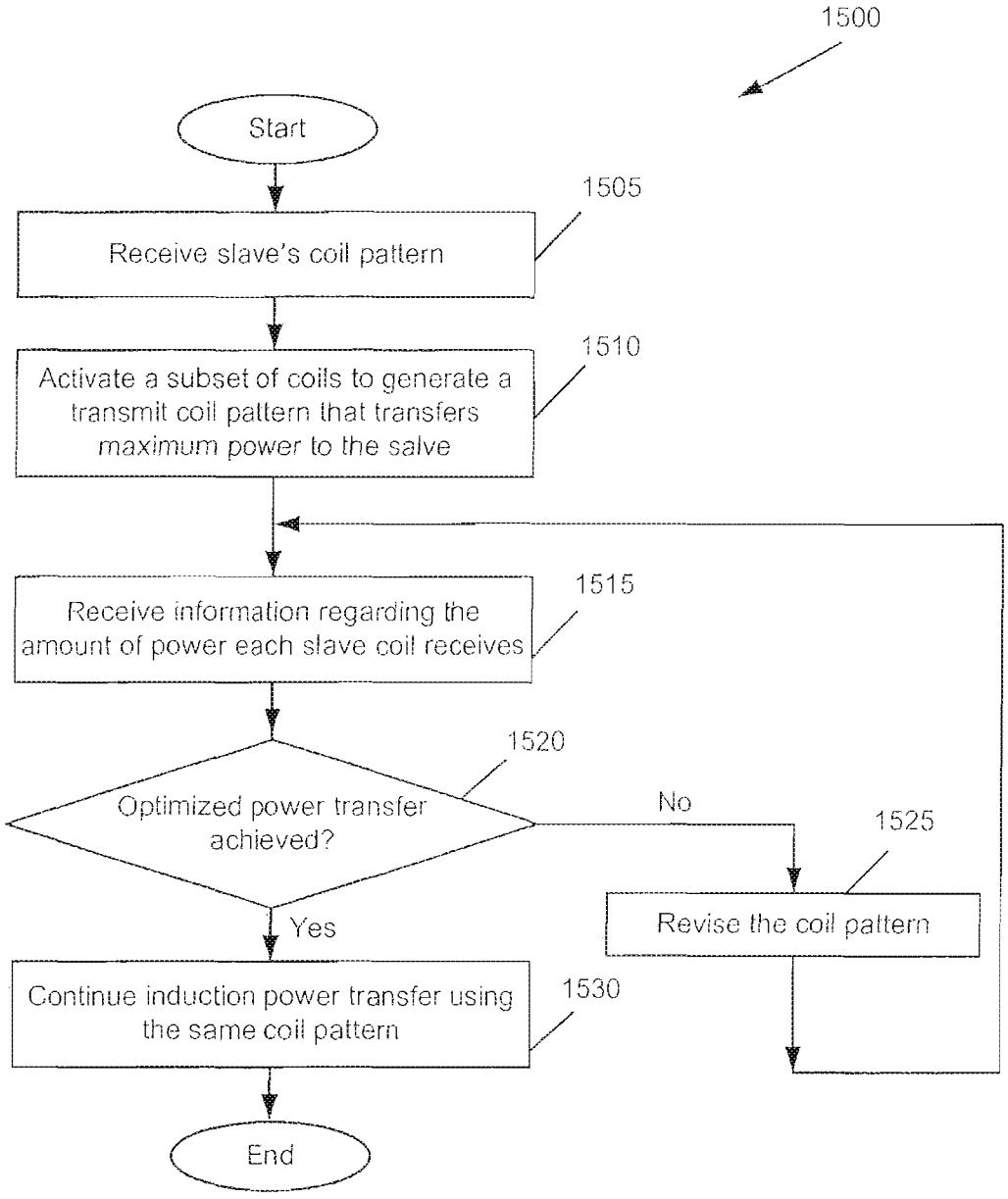
1500
Start
1505
Receive slave's coil pattern
1510
Activate a subset of coils to generate a transmit coil pattern that transfers maximum power to the salve
1515
Receive information regarding the amount of power each slave coil receives
1520
Optimized power transfer achieved?
No
1525
Revise the coil pattern
Yes
1530
Continue induction power transfer using the same coil pattern
End

Figure 15

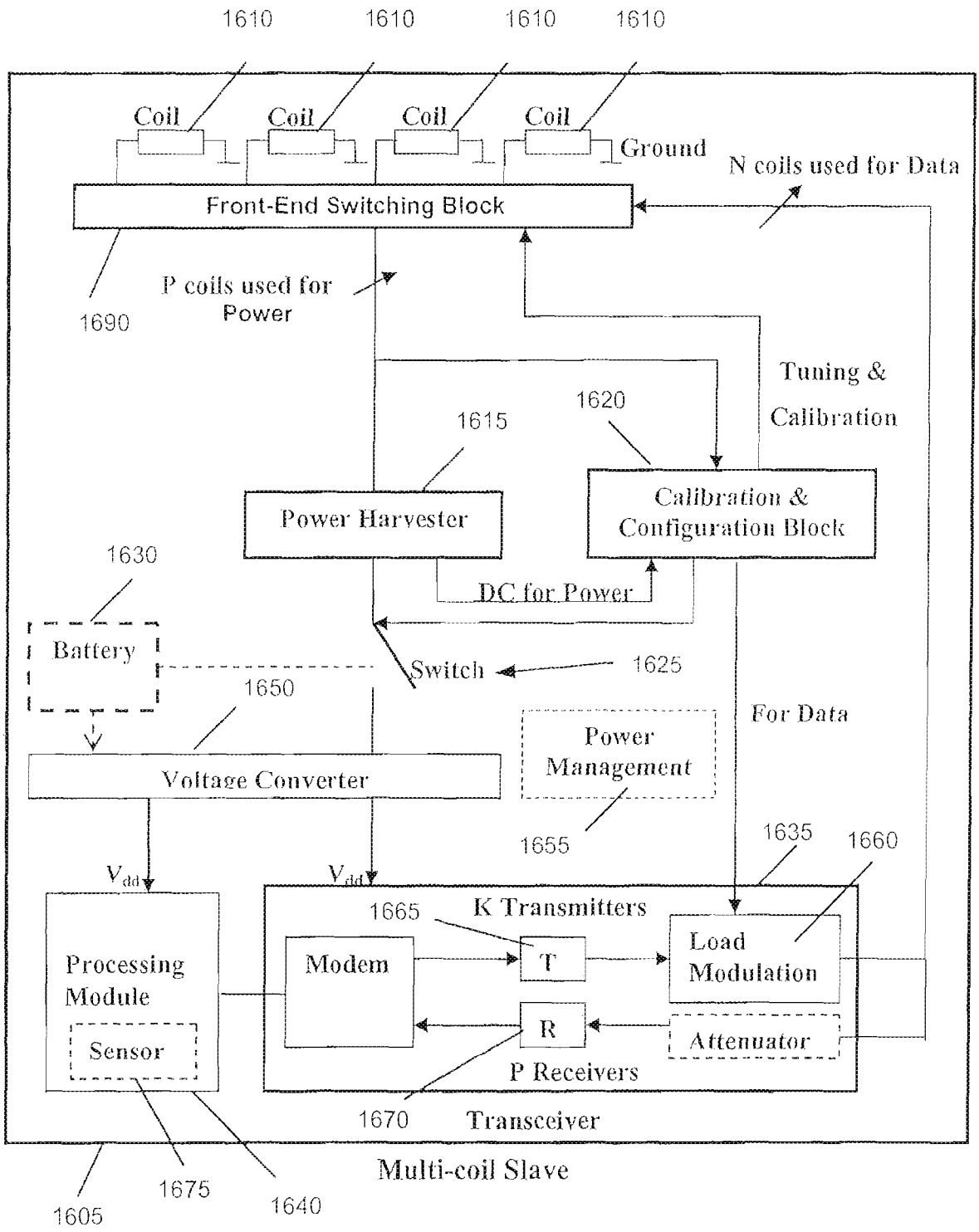
1610
1610
1610
1610
Coil
Coil
Coil
Coil
Ground
N coils used for Data
Front-End Switching Block
1690
P coils used for Power
Tuning & Calibration
1620
1615
Power Harvester
Calibration & Configuration Block
1630
DC for Power
Battery
Switch
1625
1650
For Data
Power Management
Voltage Converter
1655
1635
1660
V_{dd}
V_{dd}
1665
K Transmitters
Processing Module
Modem
T
Load Modulation
Sensor
R
Attenuator
P Receivers
1670
Transceiver
Multi-coil Slave
1605
1675
1640

Figure 16

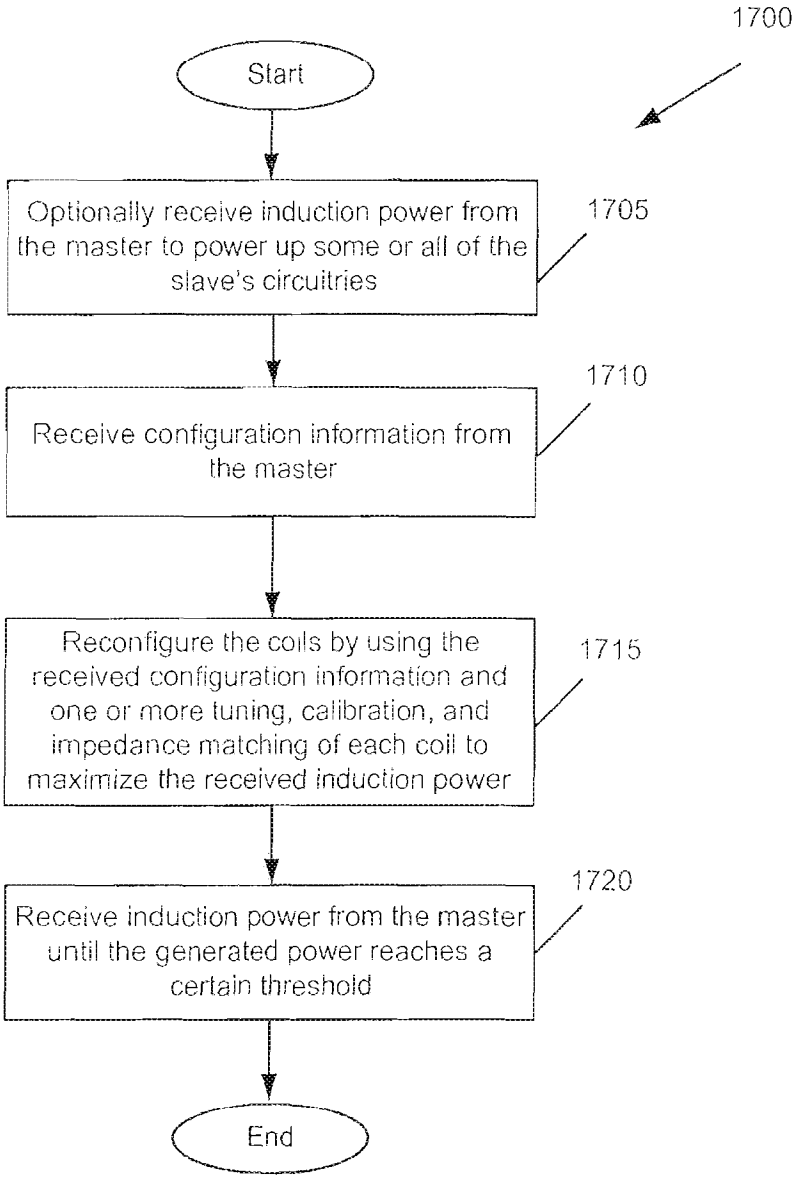
1700
Start
Optionally receive induction power from the master to power up some or all of the slave's circuitries
1705
Receive configuration information from the master
1710
Reconfigure the coils by using the received configuration information and one or more tuning, calibration, and impedance matching of each coil to maximize the received induction power
1715
Receive induction power from the master until the generated power reaches a certain threshold
1720
End

Figure 17

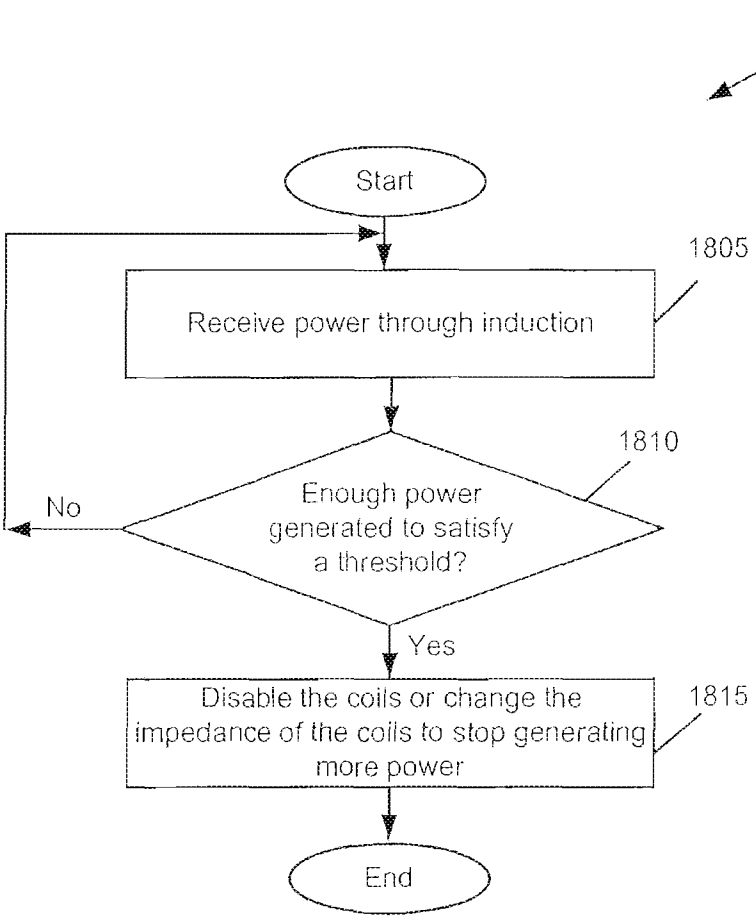
1800
Start
1805
Receive power through induction
1810
Enough power generated to satisfy a threshold?
No
Yes
1815
Disable the coils or change the impedance of the coils to stop generating more power
End

Figure 18

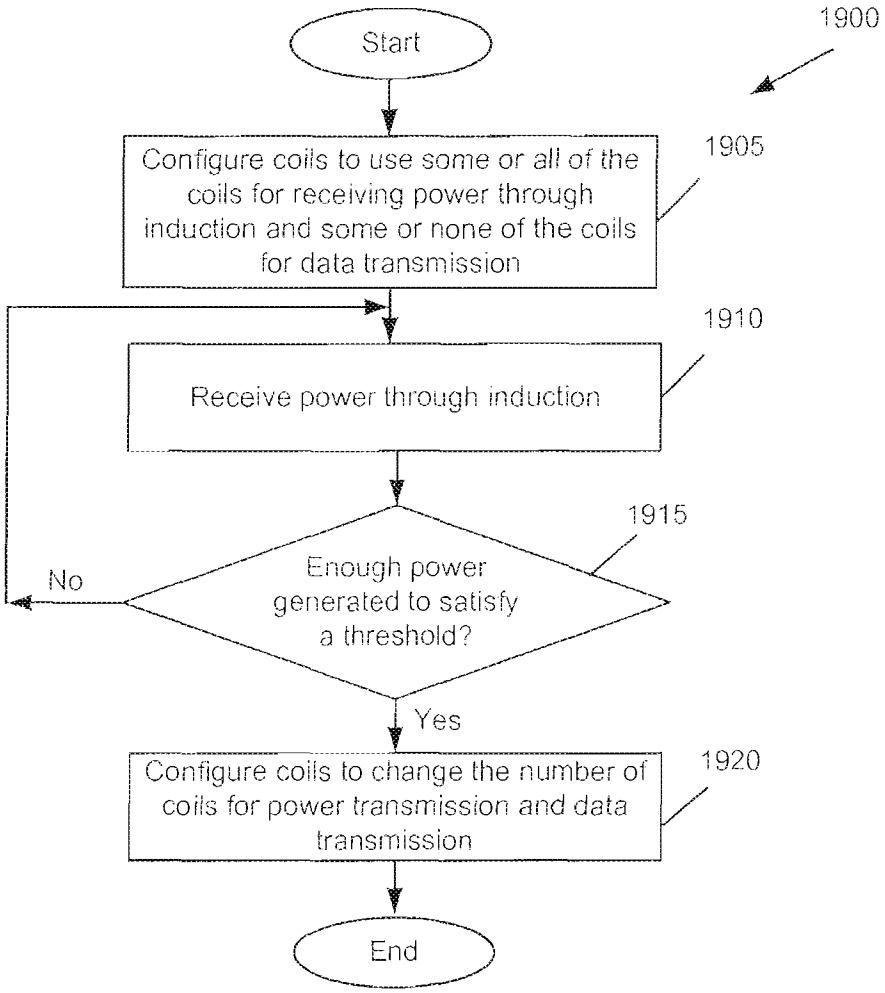
1900
Start
Configure coils to use some or all of the coils for receiving power through induction and some or none of the coils for data transmission
1905
Receive power through induction
1910
Enough power generated to satisfy a threshold?
1915
No
Yes
Configure coils to change the number of coils for power transmission and data transmission
1920
End

Figure 19

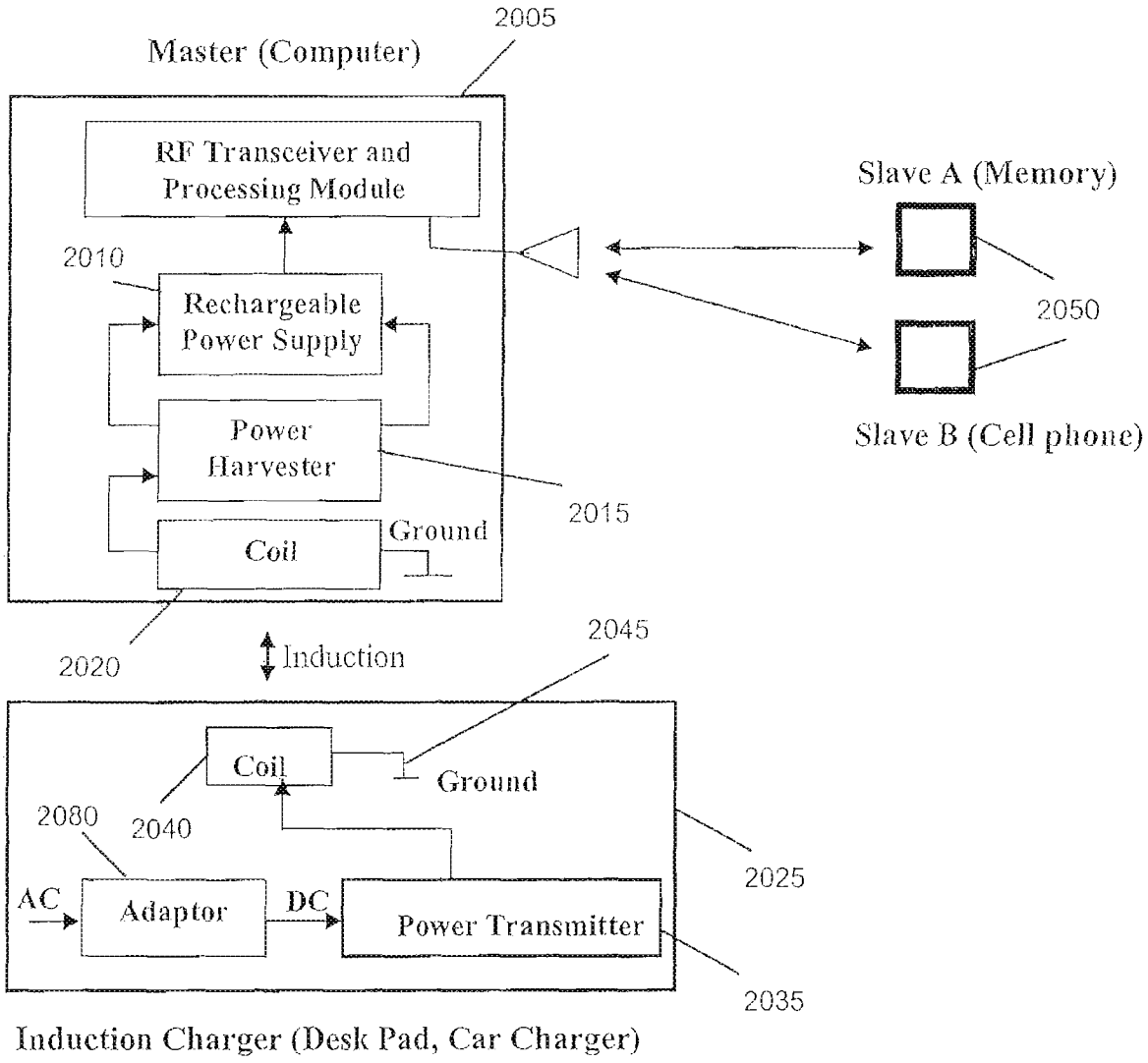
2005
Master (Computer)
RF Transceiver and Processing Module
2010
Rechargeable Power Supply
Power Harvester
2015
Coil
Ground
2020
Induction
Slave A (Memory)
2050
Slave B (Cell phone)
2045
Coil
Ground
2080
2040
2025
AC
Adaptor
DC
Power Transmitter
2035
Induction Charger (Desk Pad, Car Charger)

Figure 20

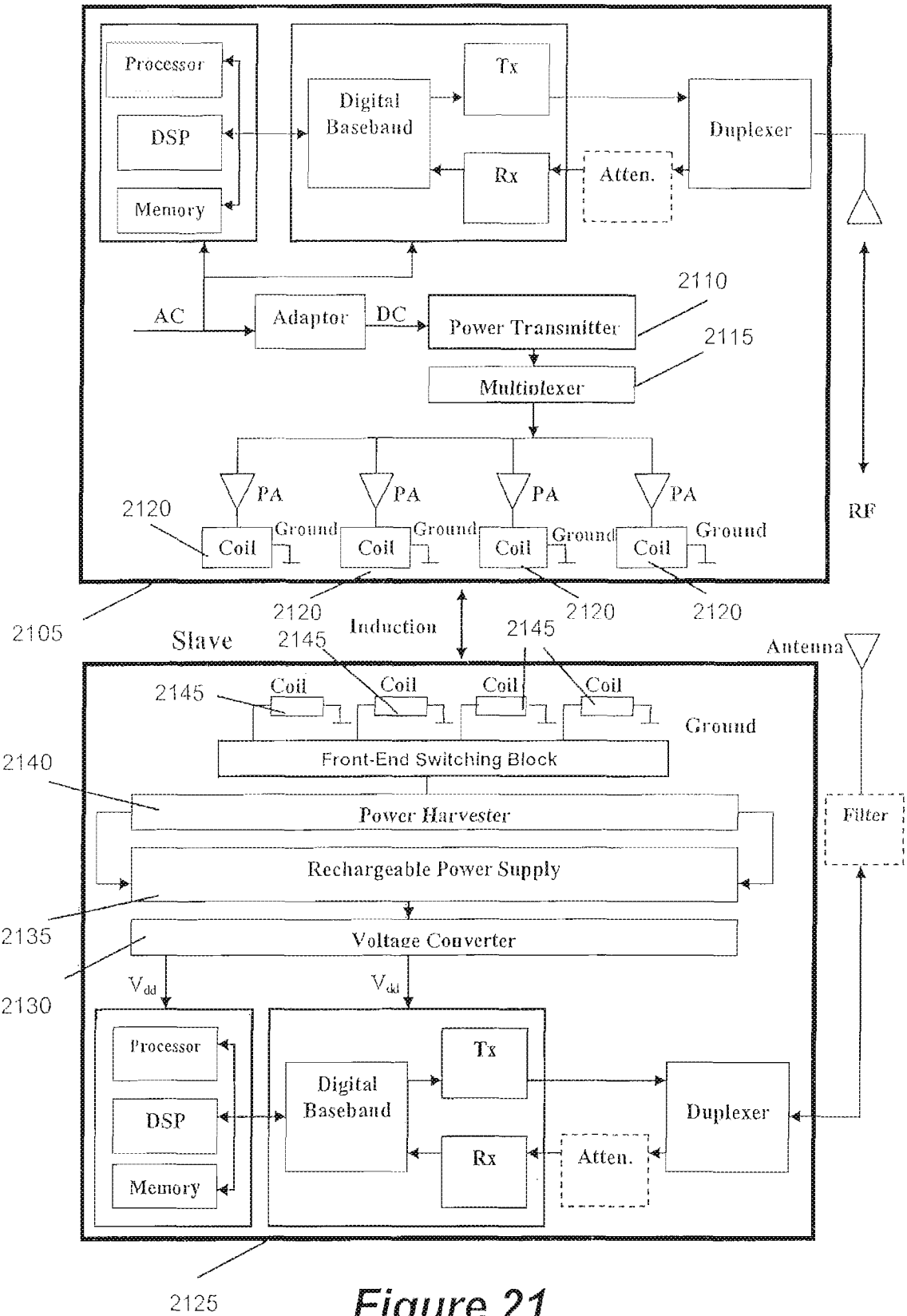
Processor
DSP
Memory
Digital Baseband
Tx
Rx
Atten.
Duplexer
AC
Adaptor
DC
Power Transmitter
2110
2115
Multiplexer
PA
PA
PA
PA
2120
Coil
Ground
Coil
Ground
Coil
Ground
Coil
Ground
RF
2105
2120
2120
2120
Induction
Slave
2145
2145
Antenna
2145
Coil
Coil
Coil
Coil
Ground
Front-End Switching Block
2140
Power Harvester
Filter
Rechargeable Power Supply
2135
Voltage Converter
2130
Vdd
Vdd
Processor
DSP
Memory
Digital Baseband
Tx
Rx
Atten.
Duplexer
2125

Figure 21

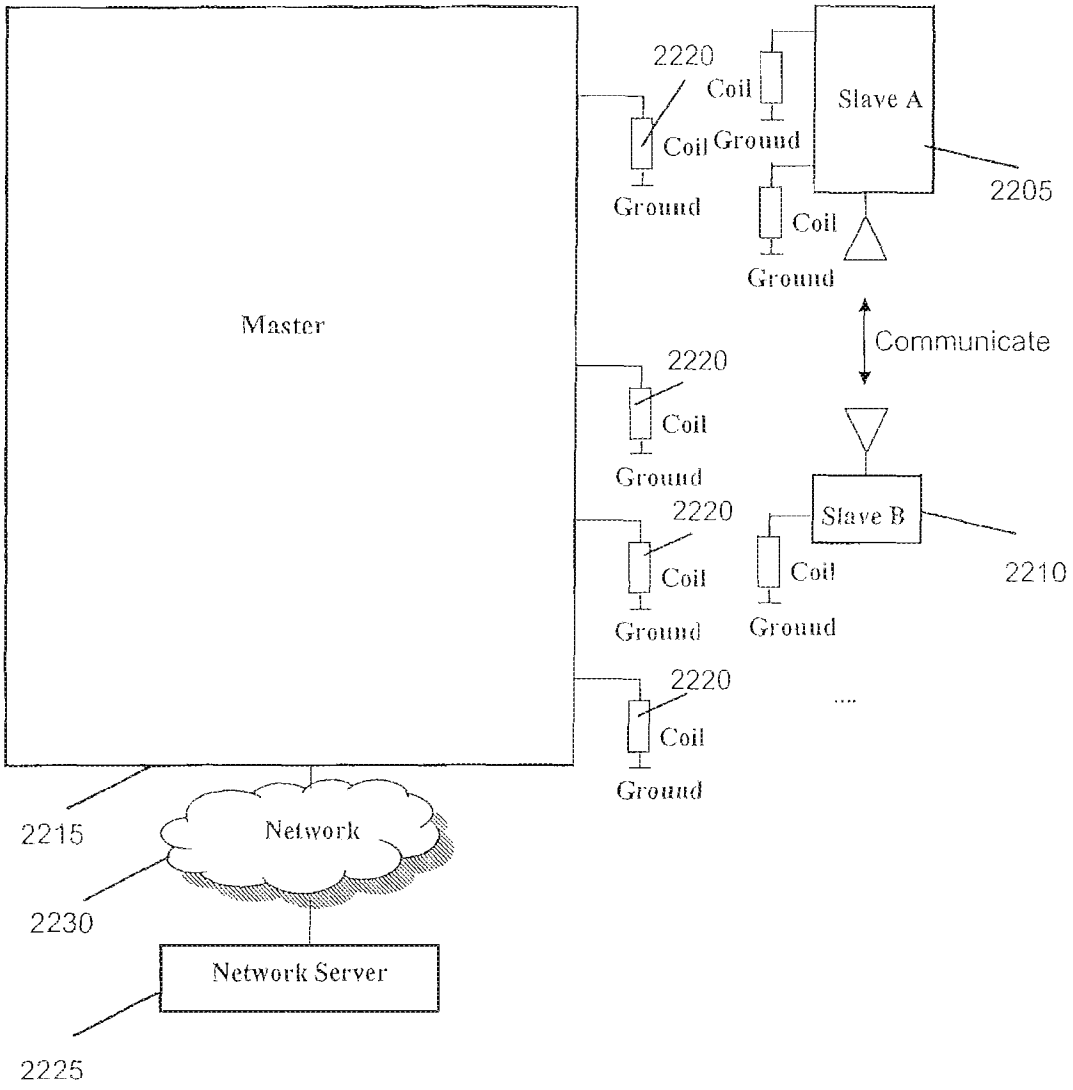
Master
2220
Coil
Ground
Slave A
2205
Communicate
Slave B
2210
2215
Network
2230
Network Server
2225

Figure 22

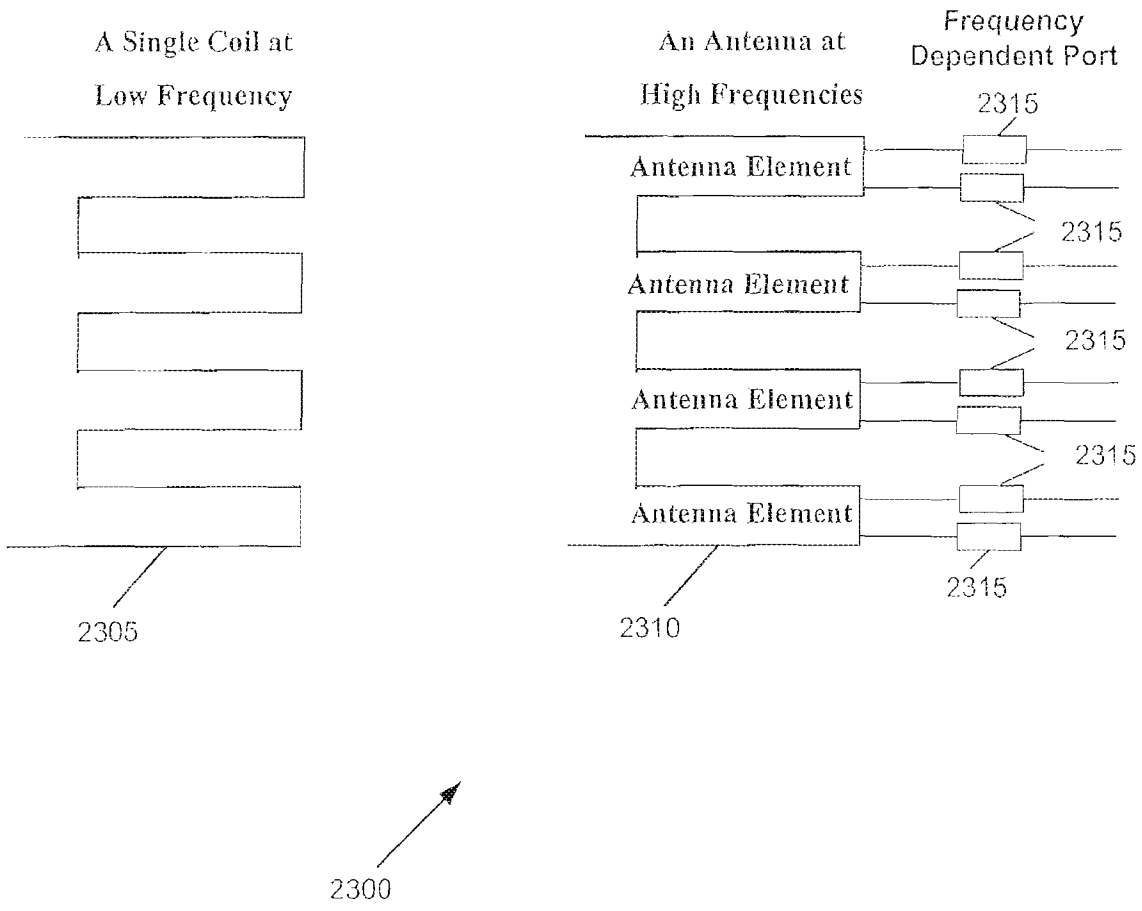
A Single Coil at
Low Frequency
An Antenna at
High Frequencies
Frequency
Dependent Port
2315
Antenna Element
2315
Antenna Element
2315
Antenna Element
2315
Antenna Element
2315
2305
2310
2300

Figure 23

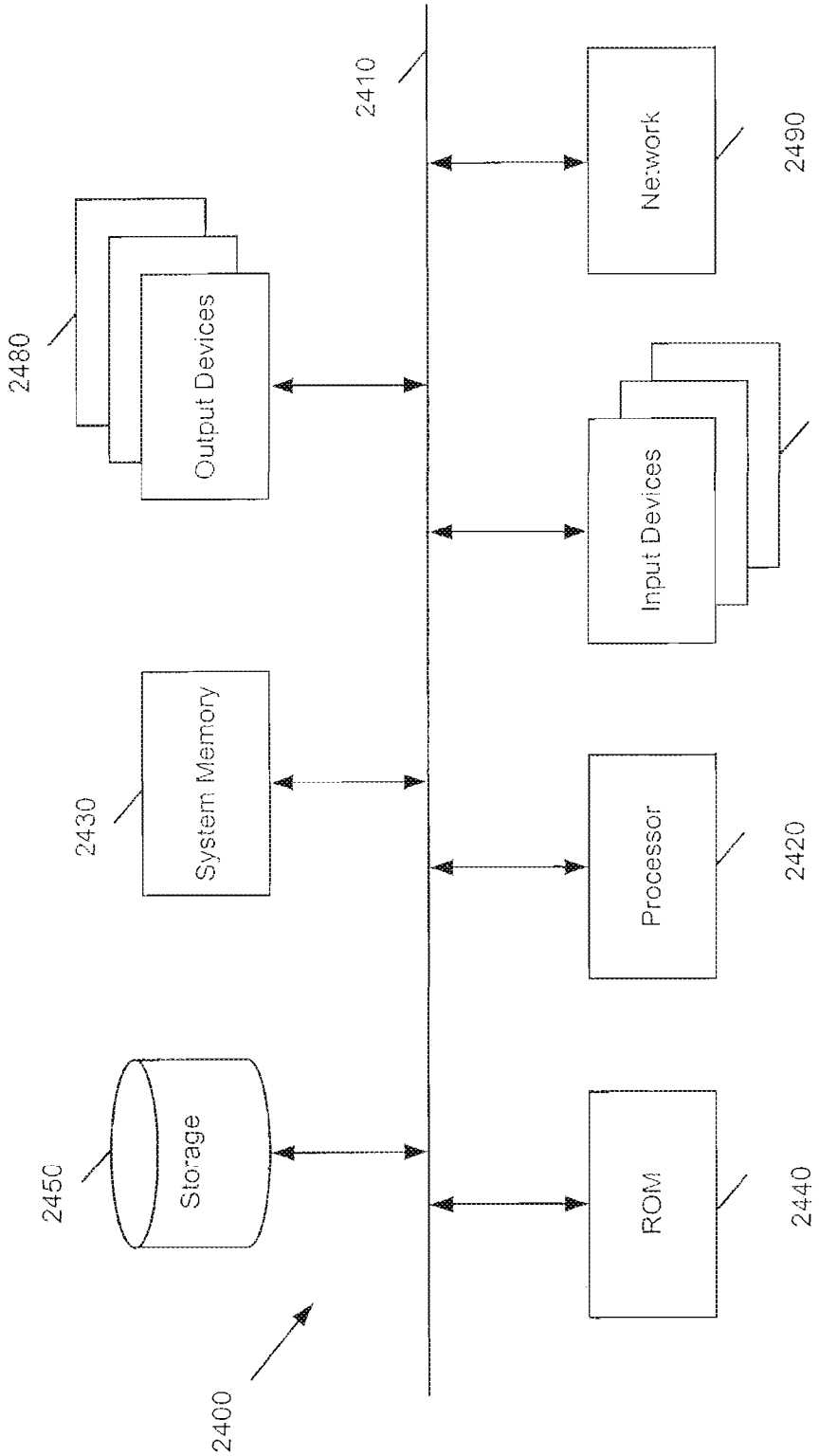
2410
Network
2490
2480
Output Devices
Input Devices
2470
System Memory
2430
Processor
2420
Storage
2450
ROM
2440
2400

Figure 24

METHOD AND APPARATUS FOR CHARGING A BATTERY-OPERATED DEVICE

CLAIM OF BENEFIT TO RELATED APPLICATIONS

The present application is a continuation application of U.S. patent application Ser. No. 16/436,824, entitled "Portable Pad for Wireless Charging," filed Jun. 10, 2019, which is a continuation application of U.S. patent application Ser. No. 15/610,379, entitled "Portable Pad for Wireless Charging," filed May 31, 2017, now U.S. Pat. No. 10,355,531, which is a continuation application of U.S. patent application Ser. No. 15/263,629, entitled "Selective Wireless Charging of Authorized Slave Devices," filed Sep. 13, 2016, now U.S. Pat. No. 9,847,670, which is a continuation application of U.S. patent application Ser. No. 14/223,841, entitled "Method and Apparatus for Wirelessly Transferring Power and Communicating with One or More Slave Devices," filed Mar. 24, 2014, now U.S. Pat. No. 9,608,472, which is itself a continuation application of U.S. patent application Ser. No. 12/979,254, entitled "Method and apparatus for wirelessly transferring power and communicating with one or more slave devices," filed Dec. 27, 2010, now U.S. Pat. No. 8,686,685. U.S. patent application Ser. No. 12/979,254 claims the benefit of and priority to U.S. Provisional Patent Application 61/290,184, entitled, "Master Device that Wirelessly Transfers Power and Communicates with a Plurality of Slave Devices," filed Dec. 25, 2009. The contents of all of the above-identified applications are hereby incorporated fully by reference into the present application.

BACKGROUND

Induction is a common form for wireless power. Non resonant induction systems like transformers use a primary coil to generate a magnetic field. A secondary coil is then placed in that magnetic field and a current is induced in the secondary coil. Induction, however, has the disadvantage that the receiver must be very close to the transmitter in order to inductively couple to it. At large distances induction wastes most of the energy in the resistive losses of the primary coil. Resonant inductive coupling improves energy transfer efficiency at larger distances by using two coils that are highly resonant at the same frequency. However, both non-resonant and resonant induction wireless power methods are non-directive and irradiate the space around them. This can be disadvantage in some situations since there are regulations that limit human exposure to alternating magnetic fields because of concern for biological impacts on the users. Also, since they use low frequencies (KHz to 7 MHz) they cannot be used for high speed communication.

BRIEF SUMMARY

The preceding Summary is intended to serve as a brief introduction to some embodiments of the invention. It is not meant to be an introduction or overview of all inventive subject matter disclosed in this document. The Detailed Description that follows and the Drawings that are referred to in the Detailed Description will further describe the embodiments described in the Summary as well as other embodiments. Accordingly, to understand all the embodiments described by this document, a full review of the Summary, Detailed Description and the Drawings is needed.

Moreover, the claimed subject matters are not to be limited by the illustrative details in the Summary, Detailed Description and the Drawing, but rather are to be defined by the appended claims, because the claimed subject matters can be embodied in other specific forms without departing from the spirit of the subject matters.

Some embodiments provide a wireless transmitter that uses radio frequencies (RF) with small high gain directive antennas and high frequency radio waves or electromagnetic induction to charge one or more receiving devices and then communicate with them. Wireless communication is convenient because it allows devices to connect to each other without wires. Wireless power is convenient because it removes the need for wires and connectors. This invention combines these two aspects together.

Some embodiments use radio frequency (RF) instead of resonant electromagnetic induction to charge and communicate with slave devices. Throughout this specification the 60 GHz spectrum is used for describing the RF charging aspect of this invention. However, 60 GHz is only one special case of using higher frequencies for implementing this invention. In the U.S. the 60 GHz spectrum band can be used for unlicensed short range data links (1.7 km) with data throughputs up to 2.5 Gbits/s. Higher frequencies such as the 60 GHz spectrum experience strong free space attenuation. The smaller wavelength of such high frequencies also enables the use of small high gain antennas with small beam widths. The combination of high attenuation and high directive antenna beams provides better frequency reuse so that the spectrum can be used more efficiently for point-to-multipoint communications. For example, a larger number of directive antennas and users can be present in a given area without interfering with one another, compared to less directive antennas at lower frequencies. Small beam width directive antennas also confine the electromagnetic waves to a smaller space and therefore limit human exposure. The higher frequencies also provide more bandwidth and allow more information to be wirelessly transmitted. Thus, the same antenna can be used to for power generation and communication.

There are several standards bodies that are using high frequencies such as 60 GHz. These include WirelessHD, WiGig, and WiFi IEEE 802.11ad. The WirelessHD specification is based on the 7 GHz of continuous bandwidth around the 60 GHz radio frequency and allows for digital transmission of uncompressed high definition (HD) video, audio and data. It is aimed at consumer electronics applications and provides a digital wireless interface for file transfers, wireless display and docking, and lossless HD media streaming for ranges up to 10 meters. Theoretically it can support data rates as high as 25 Gbit/s. The 60 GHz band usually requires line of sight between transmitter and receiver because of high absorption. The WirelessHD specification gets around this limitation by using beam forming at the transmitter and receiver antennas to increase effective power of the signal.

The WiGig standard (short for the "Wireless Gigabit Alliance") is also promoting high speed wireless communication over the unlicensed 60 GHz spectrum and is a competing standard to WirelessHD. The WiGig standard is also taking advantage of the high absorption of 60 GHz that limits signal propagation and reduces interference with other wireless systems.

IEEE 802.11ad is also under development by the IEEE task group for the upcoming 60 GHz standard. This is essentially a faster version of the IEEE 802.11 standard that

uses the 60 GHz band. However, because it uses a new spectrum it will not be backward compatible with existing WiFi.

Wireless USB is a standard which does not use 60 GHz. Wireless USB uses the Ultra-wideBand (UWB) radio platform that operates in the 3.1 to 10.6 GHz frequency and can transmit 480 Mbit/s at distances up to 3 meters and 110 Mbit/s at up to 10 meters. While the goal of 802.11 family (802.11*) WiFi is to replace Ethernet cables and provide wireless Internet access, the goal of Wireless USB is to remove the cables from USB based PC peripherals. Wireless USB can be used for printers, scanners, digital cameras, MP3 players, game controllers, hard disks, and flash drives. Both WirelessHD and WiGig are competing in some aspects with the Wireless USB standard. Inductive Charging in some embodiments is performed at lower frequencies such as frequencies of less than 100 MHz, whereas RF frequencies used in some embodiments is greater than 900 MHz or 1 GHz. The higher the RF frequencies, the smaller the wavelength and hence the smaller the size of the antenna.

None of the above standards address charging slave devices before communicating with them. Instead they assume that the slaves have access to some power source such as AC power or a battery. In some embodiments a master device uses one or more directional antennas or uses antenna array beam forming to transmit high frequency RF signals to one or more slave devices to power them up or charge their batteries. By using the directional antennas or using antenna array beam forming, these embodiments concentrate the power on a smaller area.

Some embodiments provide a networked system with a master device that can power-up or charge a plurality of slave devices and communicate with them. In some embodiments the master is connected to other network devices and/or Intranet/Internet though packet-based or non packet based networks and wired or wireless networks (such as Bluetooth®, Wireless Local Area Network (WLAN), fourth generation (4G) cellular, Code Division Multiple Access (CDMA), Time Division Multiple Access (TDMA), Worldwide Interoperability for Microwave Access (WiMAX), UWB and 60 GHz). The master in some embodiments monitors the power status of a plurality of slaves, decides which subset of those slaves get charged and what their charging priorities are. The slaves in some embodiments have different power status and capabilities (some have power to communicate, while others have low battery, and yet others have no battery).

In some embodiments, the slave has sensors (e.g. temperature, gyrator, pressure, and heart monitor) with electronic circuitry that are powered up by the master, perform their sensing functions and communicate their data to the master, a network server, or some other device. The channel for power transfer in some embodiments is RF or electromagnetic induction. A control channel is used in some embodiments by the master to send commands to the slaves. Some embodiments use the same channel for power, control, and communication. One, two or all of the power, control, and communication in some embodiments use different channels (e.g. different frequencies, different radios, different antenna, and different coils for induction) or different methods (RF Beam and induction).

In some embodiments, the master configures the system to increase power and communication efficiency (e.g. uses several antenna and beam steering for RF, or several coils and coil pattern optimization for induction). In some embodiments the master and the slave have a matrix of coils (for induction) and the master changes it's transmit coil pattern in order to optimize power transfer to the slave. Several masters in some embodiments cooperate or are configured by a network server or remote user to use beam steering and different antennas to charge a plurality of slaves. In some embodiments the slaves provide their identifying information and register themselves in a slave information database. In some embodiments the masters provide their identifying information and register themselves in a master information database. The master in some embodiments receives a slave's identifying information (MAC ID, network Internet protocol (IP) address, name, serial number, product name and manufacturer, capabilities, etc.) by communicating with the slave or by examining the slave information database to select which slaves to power up, charge, or communicate with. A slave in some embodiments prevents non-authorized masters (or networked servers) from trying to charge it or power it up by checking the master's identifying information with the authorized master's list stored on the slave. The master's selection and power scheduling of slaves is dependent on the priorities of slaves' functions and data in some embodiments.

In some embodiments, the master uses frequency hopping and time hopping to select some slaves from a plurality of slaves. A master in some embodiments charges a slave to a pre-set high level, then communicates with it until battery falls to a pre-set low level, and then charges slave again, etc. A master in some embodiments powers-up/charges a slave's battery and communicate with the slave at the same time. In some embodiments a slave that is powered up gets connected to a network (packet-based or non packet based, wired or wireless such as Bluetooth®, WLAN, 4G cellular, CDMA, TDMA, WiMax, UWB and 60 GHz) through the master, through other nearby slaves, or directly to an access point/tower.

A master that does not have a network connection in some embodiments charges a slave and uses the slave's network connection to connect to the network and perform networked operations such as downloading software and driver upgrades. In some embodiments a slave that is powered up and charged becomes a master charger for other slaves.

The master and the slave optionally have a touch screen and/or keyboard for entering data which can be displayed on the screen and/or communicated, respectively, to the slave and the master in some embodiments. A network server that is connected to the master is effectively the real master in some embodiments and instructs the master, monitors the power status of a plurality of slaves, decides which subset of those slaves are powered up/charged/communicate with, and what their priorities are. Also, an authorized remote user in some embodiments uses the network to connect to the network server and control the network server, which in turn instructs the masters to monitor the power status of a plurality of slaves, decide which subset of those slaves are powered up/charged/communicate with, and what their priorities are.

A non-conductive spacer is used in some embodiments to create a separation distance of several wavelengths for RF charging and communication. Networked master chargers (both RF and induction) are in some embodiments built-in to conference room tables, office tables or lightweight pads so that meeting participants are able to wirelessly charge their devices, connect to each other or to the Intranet/Internet, transmit/receive information, and make payment transactions. Multi-coil induction masters, tables or pads in some embodiments have a credit card reader. Similarly, RF masters in some embodiments include credit card readers, so users can "sweep" their card for magnetic cards or they can

read NFC-enabled cards with NFC. Therefore, users of slaves are not only able to charge their devices but also make payment transactions. For instance, phones with near field communication (NFC) capabilities in some embodiments are charged and are also used for contactless payment so that the user places the phone near those coils (or RF beams of a master in the case of RF-based master) in order to transmit payment information to a secured server on the Internet. Alternatively, credit cards in some embodiments have a chip so that they transmit their information to the master device.

Some of the coils of a multi-coil master (or RF beams of a master in the case of a multi-antenna RF-based master) in some embodiments are dedicated and optimized for communication, while others are optimized for charging. The master has different means for power, e.g., one or more of AC and adaptor, battery, induction, etc.

In some embodiments, a master uses an external induction charger to get charged, and then uses a high frequency directional and focused RF beam to power up a slave device and communicate with it. A master uses induction in some embodiments to charge a slave and uses a communication transceiver (e.g. a high frequency directional and focused RF beam) to communicate with the slave. Two or more slaves are charged by a master induction charger in some embodiments and then communicate with each other directly or through the master, possibly under the control of a remote network server.

In some embodiments an element is designed for the master, slave or both so that at low frequencies the element is like a coil inductor and at high frequencies the element is like an antenna. This means that at the same time both RF power and induction power are available. If the distance is short then waves cannot be created and it will be more like induction. So distance is used to select one mode or the mode is chosen automatically. In other embodiments, the master, slave or both to have two different elements for different distances (one for short distances and one for far distances). In some of these embodiments, the master does time multiplexing between the two or select one over the other. In some embodiments, an element is designed to be a coil at low frequencies and a multiple antenna at high frequencies with beam forming capabilities. The length of the coil is much bigger than the size of antenna required for RF at high frequencies. In some embodiments, this coil is divided into multiple RF antennas and the resulting multiple antennas is used to do beam forming.

BRIEF DESCRIPTION OF THE DRAWINGS

The novel features of the invention are set forth in the appended claims. However, for purpose of explanation, several embodiments of the invention are set forth in the following figures.

FIG. **1** conceptually illustrates an overview of the networked aspect of some embodiments of the invention.

FIG. **2** conceptually illustrates an overview of the system of some embodiments of the invention where the slave does not have a battery.

FIG. **3** conceptually illustrates an alternative system of some embodiments of the invention where the slave has a battery.

FIG. **4** illustrates a more detailed diagram of the embodiments shown in FIGS. **2** and **3**.

FIG. **5** conceptually illustrates a process for master-slave charging and communication in some embodiments of the invention.

FIG. **6** conceptually illustrates a master two different transmitters for power generation and communication in some embodiments of the invention.

FIG. **7** conceptually illustrates a master and a slave that each include two separate antennas/transceivers, one for power generation and one for communication in some embodiments of the invention.

FIG. **8** conceptually illustrates a master in some embodiments of the invention that uses beam steering to change the direction of the beam when the slave is not directly in front of its beam.

FIG. **9** conceptually illustrates a multi-antenna RF master that has a non-conductive spacer material in front of its antenna in some embodiments of the invention.

FIG. **10** conceptually illustrates a master that uses induction to charge and communicate with a slave in some embodiments of the invention.

FIG. **11** conceptually illustrates a master in some embodiments of the invention that uses the power transmitter for charging, and a separate transmitter for data transmission.

FIG. **12** conceptually illustrates a master that has a power transmitter for each of its coils in some embodiments of the invention.

FIG. **13** conceptually illustrates a master in some embodiments of the invention with coils that have the same frequency and a multiplexer to activate coils at different times.

FIG. **14** conceptually illustrates induction between the master and the slave by using more than one coil on the master or the slave in some embodiments of the invention.

FIG. **15** conceptually illustrates a process of some embodiments of the invention to change a master device's coil pattern in some embodiments of the invention.

FIG. **16** conceptually illustrates a multi-coil slave with induction charging in some embodiments of the invention.

FIG. **17** conceptually illustrates a process for reconfiguring coils of a slave device in some embodiments of the invention.

FIG. **18** conceptually illustrates a process for terminating power generation in the slave in some embodiments of the invention.

FIG. **19** conceptually illustrates a process for configuring the slave's coils for either power generation or data transmission in some embodiments of the invention.

FIG. **20** conceptually illustrates a hybrid system of some embodiments of the invention where the master uses an induction charger as a power source to power itself and then uses a high frequency directional and focused RF beam to power up one or more slave devices and communicate with them.

FIG. **21** conceptually illustrates a master in some embodiments of the invention that acts as an induction charger and uses induction to charge the slave before using its high frequency directional beam to communicate with the slave.

FIG. **22** conceptually illustrates two slaves in some embodiments of the invention that use the power of a master's coils to power up or charge their batteries and then communicate with each other using their communication transceivers.

FIG. **23** conceptually illustrates an element in some embodiments of the invention that is designed to be a coil at low frequencies and a multiple antenna at high frequencies with beam forming capabilities.

FIG. **24** conceptually illustrates a computer system with which some embodiments of the invention are implemented.

DETAILED DESCRIPTION

In the following detailed description of the invention, numerous details, examples, and embodiments of the inven-

tion are set forth and described. However, it will be clear and apparent to one skilled in the art that the invention is not limited to the embodiments set forth and that the invention may be practiced without some of the specific details and examples discussed.

Some embodiments provide a wireless transmitter that uses radio frequencies (RF) with small high gain directive antennas and high frequency radio waves or electromagnetic induction to charge one or more receiving devices and then communicate with them. Wireless communication is convenient because it allows devices to connect to each other without wires. Wireless power is convenient because it removes the need for wires and connectors. This invention combines these two aspects together.

Some embodiments use radio frequency (RF) instead of resonant electromagnetic induction to charge and communicate with slave devices. Throughout this specification the 60 GHz spectrum is used for describing the RF charging aspect of this invention. However, 60 GHz is only one special case of using higher frequencies for implementing this invention. In the U.S. the 60 GHz spectrum band can be used for unlicensed short range data links (1.7 km) with data throughputs up to 2.5 Gbits/s. Higher frequencies such as the 60 GHz spectrum experience strong free space attenuation. The smaller wavelength of such high frequencies also enables the use of small high gain antennas with small beam widths. The combination of high attenuation and high directive antenna beams provides better frequency reuse so that the spectrum can be used more efficiently for point-to-multipoint communications. For example, a larger number of directive antennas and users can be present in a given area without interfering with one another, compared to less directive antennas at lower frequencies. Small beam width directive antennas also confine the electromagnetic waves to a smaller space and therefore limit human exposure. The higher frequencies also provide more bandwidth and allow more information to be wirelessly transmitted. Thus, the same antenna can be used to for power generation and communication.

There are several standards bodies that are using high frequencies such as 60 GHz. These include WirelessHD, WiGig, and WiFi IEEE 802.11ad. The WirelessHD specification is based on the 7 GHz of continuous bandwidth around the 60 GHz radio frequency and allows for digital transmission of uncompressed high definition (HD) video, audio and data. It is aimed at consumer electronics applications and provides a digital wireless interface for file transfers, wireless display and docking, and lossless HD media streaming for ranges up to 10 meters. Theoretically it can support data rates as high as 25 Gbit/s. The 60 GHz band usually requires line of sight between transmitter and receiver because of high absorption. The WirelessHD specification gets around this limitation by using beam forming at the transmitter and receiver antennas to increase effective power of the signal.

The WiGig standard (short for the "Wireless Gigabit Alliance") is also promoting high speed wireless communication over the unlicensed 60 GHz spectrum and is a competing standard to WirelessHD. The WiGig standard is also taking advantage of the high absorption of 60 GHz that limits signal propagation and reduces interference with other wireless systems.

IEEE 802.11ad is also under development by the IEEE task group for the upcoming 600 Hz standard. This is essentially a faster version of the IEEE 802.11 standard that uses the 60 GHz band. However, because it uses a new spectrum it will not be backward compatible with existing WiFi.

Wireless USB is a standard which does not use 60 GHz. Wireless USB uses the Ultra-wideBand (UWB) radio platform that operates in the 3.1 to 10.6 GHz frequency and can transmit 480 Mbit/s at distances up to 3 meters and 110 Mbit/s at up to 10 meters. While the goal of 802.11 family (802.11*) WiFi is to replace Ethernet cables and provide wireless Internet access, the goal of Wireless USB is to remove the cables from USB based PC peripherals. Wireless USB can be used for printers, scanners, digital cameras, MP3 players, game controllers, hard disks, and flash drives. Both WirelessHD and WiGig are competing in some aspects with the Wireless USB standard. Inductive Charging in some embodiments is performed at lower frequencies such as frequencies of less than 100 MHz, whereas RF frequencies used in some embodiments is greater than 900 MHz or 1 GHz. The higher the RF frequencies, the smaller the wavelength and hence the smaller the size of the antenna.

None of the above standards address charging slave devices before communicating with them. Instead they assume that the slaves have access to some power source such as AC power or a battery. In some embodiments a master device uses one or more directional antennas or uses antenna array beam forming to transmit high frequency RF signals to one or more slave devices to power them up or charge their batteries. By using the directional antennas or using antenna array beam forming, these embodiments concentrate the power on a smaller area.

Some embodiments provide a networked system with a master device that can power-up or charge a plurality of slave devices and communicate with them. In some embodiments the master is connected to other network devices and/or Intranet/Internet though packet-based or non packet based networks and wired or wireless networks (such as Bluetooth®, Wireless Local Area Network (WLAN), fourth generation (4G) cellular, Code Division Multiple Access (CDMA), Time Division Multiple Access (TDMA), Worldwide Interoperability for Microwave Access (WiMAX), UWB and 60 GHz). The master in some embodiments monitors the power status of a plurality of slaves, decides which subset of those slaves get charged and what their charging priorities are. The slaves in some embodiments have different power status and capabilities (some have power to communicate, while others have low battery, and yet others have no battery).

In some embodiments, the slave has sensors (e.g. temperature, gyrator, pressure, and heart monitor) with electronic circuitry that are powered up by the master, perform their sensing functions and communicate their data to the master, a network server, or some other device. The channel for power transfer in some embodiments is RF or electromagnetic induction. A control channel is used in some embodiments by the master to send commands to the slaves, Some embodiments use the same channel for power, control, and communication. One, two or all of the power, control, and communication in some embodiments use different channels (e.g. different frequencies, different radios, different antenna, and different coils for induction) or different methods (RF Beam and induction).

In some embodiments, the master configures the system to increase power and communication efficiency (e.g. uses several antenna and beam steering for RF, or several coils and coil pattern optimization for induction). In some embodiments the master and the slave have a matrix of coils (for induction) and the master changes it's transmit coil

pattern in order to optimize power transfer to the slave. Several masters in some embodiments cooperate or are configured by a network server or remote user to use beam steering and different antennas to charge a plurality of slaves. In some embodiments the slaves provide their identifying information and register themselves in a slave information database. In some embodiments the masters provide their identifying information and register themselves in a master information database. The master in some embodiments receives a slave's identifying information (MAC ID, network Internet protocol (IP) address, name, serial number, product name and manufacturer, capabilities, etc.) by communicating with the slave or by examining the slave information database to select which slaves to power up, charge, or communicate with. A slave in some embodiments prevents non-authorized masters (or networked servers) from trying to charge it or power it up by checking the master's identifying information with the authorized master's list stored on the slave. The master's selection and power scheduling of slaves is dependent on the priorities of slaves' functions and data in some embodiments.

In some embodiments, the master uses frequency hopping and time hopping to select some slaves from a plurality of slaves. A master in some embodiments charges a slave to a pre-set high level, then communicates with it until battery falls to a pre-set low level, and then charges slave again, etc. A master in some embodiments powers-up/charges a slave's battery and communicate with the slave at the same time. In some embodiments a slave that is powered up gets connected to a network (packet-based or non packet based, wired or wireless such as Bluetooth®, WLAN, 4G cellular, CDMA, TDMA, WiMax, UWB and 60 GHz) through the master, through other nearby slaves, or directly to an access point/tower.

A master that does not have a network connection in some embodiments charges a slave and uses the slave's network connection to connect to the network and perform networked operations such as downloading software and driver upgrades. In some embodiments a slave that is powered up and charged becomes a master charger for other slaves.

The master and the slave optionally have a touch screen and/or keyboard for entering data which can be displayed on the screen and/or communicated, respectively, to the slave and the master in some embodiments. A network server that is connected to the master is effectively the real master in some embodiments and instructs the master, monitors the power status of a plurality of slaves, decides which subset of those slaves are powered up/charged/communicate with, and what their priorities are. Also, an authorized remote user in some embodiments uses the network to connect to the network server and control the network server, which in turn instructs the masters to monitor the power status of a plurality of slaves, decide which subset of those slaves are powered up/charged/communicate with, and what their priorities are.

A non-conductive spacer is used in some embodiments to create a separation distance of several wavelengths for RF charging and communication. Networked master chargers (both RE and induction) are in some embodiments built-in to conference room tables, office tables or lightweight pads so that meeting participants are able to wirelessly charge their devices, connect to each other or to the Intranet/Internet, transmit/receive information, and make payment transactions. Multi-coil induction masters, tables or pads in some embodiments have a credit card reader. Similarly, RF masters in some embodiments include credit card readers, so users can "sweep" their card for magnetic cards or they can read NFC-enabled cards with NFC. Therefore, users of slaves are not only able to charge their devices but also make payment transactions. For instance, phones with near field communication (NEC) capabilities in some embodiments are charged and are also used for contactless payment so that the user places the phone near those coils (or RF beams of a master in the case of RF-based master) in order to transmit payment information to a secured server on the Internet. Alternatively, credit cards in some embodiments have a chip so that they transmit their information to the master device.

Some of the coils of a multi-coil master (or RF beams of a master in the case of a multi-antenna RF-based master) in some embodiments are dedicated and optimized for communication, while others are optimized for charging. The master has different means for power, e.g., one or more of AC and adaptor, battery, induction, etc.

In some embodiments, a master uses an external induction charger to get charged, and then uses a high frequency directional and focused RF beam to power up a slave device and communicate with it. A master uses induction in some embodiments to charge a slave and uses a communication transceiver (e.g. a high frequency directional and focused RF beam) to communicate with the slave. Two or more slaves are charged by a master induction charger in some embodiments and then communicate with each other directly or through the master, possibly under the control of a remote network server.

In some embodiments an element is designed for the master, slave or both so that at low frequencies the element is like a coil inductor and at high frequencies the element is like an antenna. This means that at the same time both RF power and induction power are available. If the distance is short then waves cannot be created and it will be more like induction. So distance is used to select one mode or the mode is chosen automatically. In other embodiments, the master, slave or both to have two different elements for different distances (one for short distances and one for far distances). In some of these embodiments, the master does time multiplexing between the two or select one over the other. In some embodiments, an element is designed to be a coil at low frequencies and a multiple antenna at high frequencies with beam forming capabilities. The length of the coil is much bigger than the size of antenna required for RF at high frequencies. In some embodiments, this coil is divided into multiple RF antennas and the resulting multiple antennas is used to do beam forming.

Some embodiments provide a system for charging devices. The system includes a master device and a slave device. Some embodiments provide a method for charging devices in a system that includes a slave device and a master device. The slave device includes (1) an antenna to receive a radio frequency (RF) beam and (2) a power generation module connected to the antenna that converts RF energy received by the slave antenna to power. The master device includes (1) a directional antenna to direct RF power to the antenna of the slave device and (2) a module that provides power to the directional antenna of the master device.

Some embodiments provide a system for charging devices. The system includes a master device and a slave device. Some embodiments provide a method for charging devices in a system that includes a slave device and a master device. The master device includes a first group of coils to transmit energy by induction. The first group of coils is arranged in a first pattern. The master device also includes a module that provides alternating power to the first group of coils. The master device also includes a processing module. The slave device includes a second group of coils

to receive energy by induction from one or more coils of the master device. The second plurality of coils is arranged in a second pattern. The slave also includes a power generation module connected to the second group of coils that converts the received induction energy to power. The master processing unit (i) receives information from the slave regarding the slave coil pattern and (ii) based on the received information, activates a set of coils in the first group of coils to optimize an amount of induction energy received by the second group of coils.

In some embodiments, the processing module (i) receives information regarding the amount of induction energy received by the second group of coils and (ii) when the induction energy received by the second group of coils does not satisfy a threshold, activates a different set of coils in the first group of coils to further optimize an amount of induction energy received by the second group of coils.

Some embodiments provide a system for charging devices. The system includes a master device and a slave device. Some embodiments provide a method for charging devices in a system that includes a slave device and a master device. The master device includes a first group of coils to transmit energy by induction. The master device also includes a module that provides alternating power to the first group of coils. The slave device includes a second group of coils to receive energy by induction from one or more coils of the master device. The second group of coils has a set of operating parameters. The slave also includes a power generation module connected to the second group of coils that converts the received induction energy to power. The slave also includes a processing module. The slave processing unit (i) receives a set of master device's parameters and (ii) based on the received master device's parameters, reconfigures one or more of the operating parameters of the second group of coils to maximize the received induction power.

In some embodiments, the master device's parameters include an operating frequency of the master's induction frequency, data and modulation method used by the master, and an identifying information of the master. In some embodiments, the operating parameters of the slave device are reconfigured by tuning of one or more coils in the second plurality of coils. In some embodiments, the operating parameters of the slave device are reconfigured by calibrating of one or more coils in the second group of coils. In some embodiments the operating parameters of the slave device are reconfigured by impedance matching of one or more coils in the second group of coils.

Several more detailed embodiments of the invention are described in sections below. Section I provides an overview of several embodiments of the invention. Section II describes different embodiments of the invention that provide charging remote device using RF beams. Next, Section III describes several embodiments that charge remoter devices using induction. Section IV discusses hybrid embodiments that charge remote devices using both RF beams and induction. Finally, section V provides a description of a computer system with which some embodiments of the invention are implemented.

I. Overview

A. Charging and Communicating with One or More Slaves

FIG. **1** conceptually illustrates an overview of the networked aspect of some embodiments of the invention. Masters in some embodiments charge and communicate with one or more of the slave devices within their vicinity. The master in some embodiments is connected to other network devices. In the example of FIG. **1**, master A **105** is connected using a wireless channel (packet-based system or non-packet based system, Bluetooth®, WLAN, 4G cellular, CDMA, TDMA, WiMax, UWB and 60 GHz, etc.) through an access point **155** to a network **110** and powers up slaves **1** and **2**. Master B **115** has multiple antennas **117**, is connected to a network **110** using a wireline, and powers up slaves **3**, **4** and **5**. Master C **120** is also connected to a network **110** using a wireline. Master B **115** and master C **120** cooperate (or are controlled by a controller device such as network server **135** or remote user **140**) and use beam steering to charge slave **6**. The slaves differ in their power status and capability in some embodiments. Some slaves have power and communicate, while others have low battery, and yet others have no battery. The charging of the slaves is done wirelessly with methods such as a resonant electromagnetic induction channel or an RF channel.

B. Power Transfer to Authorized Slaves

Charging in some embodiments is initiated by the slave or by the master when the two are close to each other (for example either automatically or by pressing a button on the slave or the master, respectively). A master selects which slaves to power up and communicate with in some embodiments. The slaves have identifying information about themselves stored in their memories. This stored information includes one or more of the slaves' media access control address (MAC address or MAC ID), network IP address, name, serial number, product name and manufacturer, capabilities, etc. The master (or a controller device such as a network server, or a remote user) requests that information. In some embodiments, the slaves are proactive and communicate with the master (or a controller device such as a network server, or a remote user) if they have power (e.g. charge my battery, I want to send you some data, etc.) and provide their identifying information and register themselves in a slave information database. In some embodiments, the master has access to a stave information database that includes an authorized list. This database is locally stored **125** on the master **115** or it is stored on a possibly larger networked database **130**.

In some embodiments, a master that employs a focused directional RF beam uses beam steering to focus the beam on a particular slave, power the slave up slightly to get slave's identifying information, and only continue powering up/charging and communication if the slave's identifying information match with an entry on the authorized list. For instance, only a slave with a certain MAC ID, network IP address, name, serial number, product name, manufacturer, capabilities, etc. may be powered up, charged or communicated with. For RF-based methods frequency hopping methods are also used in some embodiments by the master and authorized slaves to allow them to get power while unauthorized nearby slaves (that do not know the hopping sequence) do not receive much power. Similarly, a master that employs focused RF beams uses time hopping to power up slaves.

A master that uses resonant induction uses the right resonant frequency that matches the slave, coil matrix frequency hopping, coil matrix time hopping, and current/voltage to power up a nearby authorized slave in some embodiments. The slave's identifying information is communicated by the slave to the master in some embodiments if the slave has some power (communicated using RF communication, backscattering, infrared or other methods), or communicated after an initial sub-optimal power-up. Again, the master only transfers power to the slave if the slave's identifying information match with an entry on an

authorized list. In some embodiments, the slave's resonant frequency is stored at the master (e.g., in slave information database **125**) or at a network database (e.g., in slave information database **130**).

C. Power Transfer only from Authorized Masters

A slave prevents non-authorized masters from trying to charge it or power it up (or networked servers from commanding masters to charge it or power it up) in some embodiments. Slaves store identifying information about masters (or networked servers) that are authorized to charge them. The stored information about authorized masters or networked servers includes one or more of the following information about the masters: the masters' media access control address (MAC ID), network IP address, name, serial number, product name and manufacturer, capabilities, etc. The slave requests identifying information from the master or the network server. The master (or the network server) in some embodiments is also proactive and sends its identifying information to the slave. The masters in some embodiments also register themselves and their identifying information in a master information database **150**. The slave in some embodiments checks the master's information with the authorized list and if there is not a match the slave disables charging and/or power-up.

D. Master's Scheduling of Slaves

The selection and power scheduling of slaves in some embodiments are dependent on the priorities of slaves' functions or data (e.g. slave **1** with a higher priority gets 5 minutes scheduled for charging and slave **2** with a tower priority gets 3 minutes). A slave information database **125** stored at the master **115** or a slave information database **130** stored on the network include priorities for slaves and their data in some embodiments. The slaves also communicate their data (and possibly the priority of their data) to the master in some embodiments. Based on this information the master then decides on a course of action.

E. Charging and Communication Strategies

The power status of slaves and their power-related requests and the master's response strategy vary significantly in different embodiments. The followings are several examples: (1) slave has battery and power and is ready to communicate. Master may communicate; (2) slave has battery and some charge, and slave requests to communicate. Master may allow communication or overrule and charge the slave further first (e.g. if after communicating the quality of slave data is not high because of the low power status of slave); (3) slave has battery and some charge, but slave requests to be fully charged. Master may honor the request and charge the slave or may overrule and communicate with the slave (e.g. if live communication has higher priority); (4) slave has battery but battery has no charge. Master may charge the battery first or just power up the stave and communicate first if communication priority is high; (5) for options 1, 2, 3, and 4 above if after communicating a slave's battery charge level reaches zero or some pre-determined tow level then the battery is charged to some higher pre-determined level before resuming communication; (6) for options 1, 2, 3, and 4 above if there is sufficient power transferred from the master to the slave then the shave may communicate at the same time that the master is charging the battery; (7) slave has battery and after it is charged by the master to a sufficient level the slave connects and communicates with nodes in another network (e.g. slaves **1** and **3** connect to Bluetooth®, WLAN, 4G cellular, WiMax, UWB, 60 GHz and mesh ad-hoc networks). The master optionally continues to charge the slave or charge the slave once the slave's battery levels reach pre-set low levels; (8) slave has no battery and needs to be powered up before communication. Master powers up the slave before communicating (e.g. slave **2** in FIG. **1**).

F. Charging Channel, Communication Channel and Control Channel

In some embodiments the same channel is used for both charging the slave and communication, while in other embodiments different channels are used for charging and communication (e.g. two RF channels possibly with different frequencies—one for charging and one for communication, or charging with resonant induction and communication with RF). In some embodiments, the master also uses a control channel to inform the slaves what it wants to do. Thus, all the commands could come over the control channel, although it is also possible to send commands over the data communication channel as well. The control channel does not need to have high bandwidth. Thus, while the communication channel and the control channel use the same frequency in some embodiments, the control channel uses a lower frequency lower bandwidth channel than the communication channel. The master may also use an induction charger or RF charger to charge its own battery if its power source is a rechargeable battery instead of AC power.

G. Connecting to New Networks for Slaves and/or Master

When the master is connected to a network (packet-based or non packet-based, Bluetooth®, WLAN, 4G cellular, TDMA, CDMA, WiMax, UWB, 60 GHz, etc., or wired connection) then a powered up or charged slave is also connected to the same network through the master (e.g. slave **4** in FIG. **1**). Likewise, when a slave is connected to a network (Bluetooth®, WLAN, 4G cellular, WiMax, UWB, 60 GHz, etc., or wired connection) then the master gets connected to that network after the master charges that slave (e.g. slave **3** and Master B **115** in FIG. **1**). Thus, after powering up slave **3** not only is slave **3** able to connect to its wireless network (Bluetooth®, WLAN, 4G cellular, WiMax, UWB, 60 GHz, etc.) but master B **115** is also able to connect to those networks through slave **3** acting as a network node. If a master does not have a network connection and a slave does the master in some embodiments charges the slave and use its network connection to connect to the network and perform networked operations such as downloading software and driver upgrades.

H. Slave Mesh Networks

A slave that gets powered up acts as a network node and communicate with other slaves in some embodiments. For instance, in FIG. **1** slave **1** is initially powered up by master A **105**. Master A **105** cannot communicate with slave **7** because slave **7** is not within its communication range. However, master A **105** can communicate with slave **1**, and slave **1** can in turn communicate with slave **7**. Likewise, slave **7** can communicate with slave **8**, etc. Thus, by charging slave **1** the master has connected itself to a mesh network of slaves and other networks that it was not connected to before.

I. Slave Becoming Chargers

Slaves that get charged act as masters and charge other slaves in some embodiments. In FIG. **1** slave **5** is charged by master B **115**. Slave **9** also needs to be charged. In this example, slave **5** charges slave **9**. This may for example be because slave **9** is too far from master B for charging.

J. Network Server or Remote User Controls the Master

The explanations above assume that masters A and B control the decision making in FIG. **1**. It is also possible that a network server is in command and is the "real" master. For example, the network server **135** instructs master B **115** to power up the slaves in its vicinity and requests information

from the slaves. Master B **115** then sends the slaves' identifying information and any matching entries it has in its own database **125** (together with any slave requests) to the network server **135**, the network server further searches the networked slave information database **130** for additional identifying and matching information, and then instructs the master on a course of action (e.g. charge slaves **1** and **3**, but no further action with unauthorized slave **4**). In some embodiments, an authorized remote user **140** uses the network **110** to connect to the network server **135** and control the network server, which in turn controls the masters as just described. Thus, depending on which component is in control (remote user, network server, or a master) that component monitors the power status of a plurality of slaves, decides which subset of those slaves get charged and what their charging priorities are.

II. Charging with RF

In some embodiments, the master uses a narrow focused RF beam for charging. Converting RF signals to DC power has been done in Radio-Frequency Identification (RFID) far field applications. In near field RFID applications, where the distance between the RFID reader and the tag is less than the wavelength of the signal, mutual inductance is used for communication. However, in far fields RFID applications, where the separation distance between the RFID reader and the tag is much greater than the wavelength of the signal, backscattering is used for communication. With backscattering a tag first modulates the received signal and then reflects it back to the reader. There are several important differences between the disclosed embodiments of the current invention and those of far field RFID which are described through this specification. For instance, RFID does not use directional beams and hence spreads the power of the transmission over a wider space and unnecessarily exposes humans to electromagnetic radiation. RFID tags also require little power to operate (e.g. the receive power is of the order of 200 microwatts) compared to the slave devices that the disclosed embodiments of the current invention powers-up and communicates with. For instance, the receive power for the slaves in some embodiments of the invention is of the order of milliwatts and higher. The upper receive power range depends on the transmit drivers and the size of the coils or antennas, and in some embodiments goes above the Watt range. RFID operates in lower frequencies (e.g. less than 960 MHz) and hence provides smaller communication bandwidths and requires much bigger antennas compared to the higher frequencies used in different embodiments of the current invention. Also, RFID uses backscattering for communication which is a low data rate method because the antenna is turned on and off by the data like an on-off modulation switch. The embodiments of the current invention provide a much higher data rate because standard wireless transceiver modulation methods are used (e.g. modulations for cellular, 802.11*, Bluetooth®) and then the data is sent to the antenna.

In contrast to RFID, some embodiments of the current invention use narrow directional focused beams in order to simulate a wire connection for charging and communication. This focusing of the beam provides more power and energy for charging slave devices. A directional antenna is an antenna which radiates the power in a narrow beam along a certain angle and directed to a certain area or receive antenna. Some embodiments of the invention use directional antennas that provide a large gain in theft favored direction. Some embodiments use a group of antennae (an antenna array) arranged to provide a large gain in a favored direction.

FIG. **2** conceptually illustrates an overview of a system **200** of some embodiments of the invention where the slave does not have a battery. The master **205** is the bigger system component with a good power source **215** (e.g. AC or a good battery life), whereas the slaves **210** (only one is shown for simplicity) have limited sources of power (e.g. limited battery or no battery). Example master devices are a car, PC, laptop, cell phone, digital/video camera, or multimedia device such as an IPod. The slave device could be any non-battery device (e.g. memory stick or memory device) or DC or battery operated device. Some examples of the latter are laptop, cell phone, PDA, wireless headsets, wireless mouse, wireless keyboard, pager, digital/video camera, external hard drive, toy, electronic book readers, sensor, CD/DVD/cassette/MP-3 player, toothbrush, lighting devices, electronic appliances, or a car (e.g., an electric car). Even AC powered devices in some embodiments use this system as a backup power system in case AC power goes off. Thus, a battery operated master could power up an AC powered device that temporarily has lost its AC power source.

In some embodiments, the master is just a dedicated charging device and does not communicate with the slaves other than for charging. The master has a power source **215** such as AC or battery. The power source powers the master's RF transceiver **220**, processing module **225** and network card **230** which are all connected to a bus **235**. Although the term transceiver (which implies a module with shared circuitry for a transmitter and receiver) is used in FIG. **2** and some of the following figures, the invention is not restricted to transceivers. Some embodiments use transmitter-receiver modules (which has transmitter and receiver in the same housing without common circuitry) while other embodiments use separate transmitter and receiver modules. The master may be connected to a network **240** such as the Internet through its network card **230** or through a wireless connection. The master has a high gain antenna **245**. The master's RF transceiver **220** uses the antenna **245** to shoot its focused beam to the slave to power up the slave. This power up RF wave is not modulated since it is used for power generation and not data transmission. The antenna in some embodiments is comprised of sub-elements such that through different phases and amplitudes the master uses beam steering to change the angle of the beam as described by reference to FIGS. **4** and **8** below. The battery-less slave **210** of FIG. **2** also has a directional antenna **250** that is connected to a power generator component **255**. The power generator provides power from the received radio frequency signals. The energy from the master's RF transmission is converted by this component to a supply voltage (not shown) and is stored in a capacitor (not shown). This supply voltage is then provided to the slave's transceiver **260** and processing module **265** to power them up. The slave may optionally have a network card (not shown) which is also powered up with this supply voltage. The slave uses the network card or its RF transceiver to connect to a network. Once the slave is powered up it is ready to communicate with the master. The master then sends commands (e.g. read from slave's memory, write to slave's memory) to the slave in some embodiments. The slave sends receive acknowledgments to the master and responds to commands. For example, in response to a read command the slave returns data (text, images, audio, and video). The slave also sends status information to the master such as "I am this device", "I have data", "I need to be charged", "My battery level is 50%", etc in some embodiments. The range of this system is not limited by the radio since the radio requires lower

sensitivity and can handle low input signals. The terms RF-based based master or RF beam master are interchangeably used in this specification to refer to a master that uses an RF beam to charge the slaves.

The power generator in FIG. **2** is used to generate a voltage supply and store it in a capacitor. FIG. **3** conceptually illustrates an alternative system **300** of some embodiments of the invention where the slave has a battery. The master components are similar to the components shown in FIG. **2**. In these embodiments, the slave battery **315** is charged by a high frequency directional RF beam from a master device **305**. The battery is then used for powering the slave **310** for communication. In FIG. **3** slave **310** uses a low frequency low bandwidth control channel **320** to adjust the position of a switch **325**. In FIG. **3** slave **310** includes a control module **320** that uses a low frequency low bandwidth control channel to adjust the position of a switch **325** and set whether to use the energy captured by the power generator **330** to power up the device, charge the battery **315**, or both. The control channel **320** could use a simple modulation method such as amplitude modulation (AM), frequency modulation (FM), phase, and quadrature amplitude modulation (QAM), rather than complex wireless modulation techniques (e.g. Orthogonal frequency-division multiplexing (OFDM)). These simple modulation schemes require less complex hardware and processing and are optimal for low-speed data. Either the slave, or the master, or both in combination can decide whether the slave should communicate at first or not. For example, the slave looks at its battery, decides how much life it has, and then determines whether to charge, communicate, or do both in some embodiments. Feedback mechanisms could be used to dynamically improve the system. For instance, if the slave sends data to the master and the master determines that the data from the slave is bad quality then the master in some embodiments uses the control channel to tell the slave to not use any of the received energy for charging and instead use all of it for live communication only. There are several possible strategies for slave power status and master charging, eight of which were listed in the previous section titled "Charging and Communication Strategies".

FIG. **4** illustrates a more detailed diagram of the embodiments shown in FIGS. **2** and **3**. The master **405** has a power source **410** such as AC power (which is rectified and regulated with an adaptor), battery, or some other power generating device (e.g. induction from another source as described below by reference to FIG. **20**). The master's RF transceiver radio has a transmitter (Tx) **415**, a receiver (Rx) **420**, and a digital baseband processing unit **425**. The transmitter includes a Digital to Analog Converter (DAC) (not shown). RF transmissions for power are not modulated, whereas data transmissions use modulation and optionally coding. The receiver includes an Analog to Digital Converter (ADC) (not shown). The digital baseband unit **425** communicates with a processing module **430** that includes a digital signal processing unit **435**, a processor **440** and memory **445**. The transceiver's transmitter and receiver use a duplexer **455** that allows bi-directional communication over a single channel and antenna. Some embodiments include an optional attenuator **450** which is placed in front of the receiver. This protects the receiver from being overloaded by the transmitter or by other large incoming signals. The attenuator also allows the receiver to receive when the transmitter transmits. The attenuator attenuates the entire signal and is like an all-pass filter. Alternatively, instead of the attenuator some embodiments include frequency-selective filter to protect the radio. FIG. **4** shows a general case where the antenna has sub-elements **442** that enable steeling of the beam. Each antenna sub-element is effectively a separate antenna and throughout this specification the term antenna and antenna sub-element will be used interchangeably. In FIG. **4** a beam-forming unit (or beam former) **453** is placed before the duplexer **455**. In other embodiments the beam-forming unit is placed after the duplexer. The beam former takes the output of the transmitter (Tx) and generates different phase and amplitudes for each of the antenna sub-elements in order to steer the beam. Likewise, on the receive side the beam-former takes multiple receive signals from each antenna sub-element and combines them with multiple phases/amplitudes and provides the output to the receiver (Rx). In yet other embodiments there is not an explicit beam-forming component and the beam-forming function is integrated into the transmitter (Tx) and receiver (Rx) where they generate the phase and amplitudes for beam-forming. The master's beam former is used to focus the transmit power on the slave's antenna for optimum power transfer, while the slave's beam former is used mostly for communication.

In some embodiments, the master and slave use a frequency hopping mechanism in order to avoid unauthorized slave devices from using the master as a charger. For example, a particular company that produces slave devices (cell phones, IPod, laptops, etc) and chargers for them could include a frequency hopping mechanism that both the slave and the master devices from that company would know about. For instance, a master detects and charges a slave using frequency f**1** and after an elapsed time T**1** the master's frequency is changed to f**2** and the slave would also know that it has to change to that frequency. After a further elapsed time of T**2** the master's frequency is changed to f**3** and the slave changes too, etc. An unauthorized slave would not know how to change its frequency with time and as a result of the mismatch between its frequency and that of the master then it will not receive a lot of power from the master. In FIG. **4**, the baseband of the transmitter has a frequency hopping unit **460** that generates the clock **463** frequency for the transmitter and receiver. In some embodiments, the transmitter and receiver have the same frequencies while in other embodiments they have different frequencies. In some embodiments the master would have an interface where the user programs the frequency hopping algorithm and downloads it to certain slaves such that the master could only charge and communicate with slave devices that the user chooses. In some embodiments, the master performs time hopping. With time hopping the master transmits at different times based on a known sequence between the master and the slaves. The slaves look at incoming energy at those known specific time intervals. In some embodiment, during each time hop the frequency also changes in order to separate the slaves further.

The slave **470** in FIG. **4** has components similar to the master **405**, the main difference is the power generation component **473** which will be discussed in more detail below. The antenna elements **499** of the slave receive the RF waves from the master. The energy from the master's non-modulated RF transmission is converted by the slave's power generator to a supply voltage, Vdd, and is stored in capacitor C **475**. This supply voltage is then fed to a voltage converter **477** whose output provides different voltage levels as required by the different slave modules. The outputs from the voltage converter are then provided to the slave's transceiver **480** and processing modules **483** (and networking module if it has one) and power them up. It is also possible that different modules have different Vdd values. If

the slave is a sensor the processing module may also optionally have a sensor and associated circuitry. Again, an optional attenuator **485** may be placed in front of the slave's receiver to protect it from being overloaded by the transmitter or by other large incoming signals. The attenuator also allows the receiver to receive when the transmitter transmits. A frequency-selective filter **487** is also used in some embodiments to protect the radio. For instance, when two different frequencies are used for power generation and communication, the filter may be chosen such that it rejects the power frequency but allows the communications frequency. Like the master, the slave also has beam forming **488** for steering its beam, and frequency hopping **481** for limiting power transfer to authorized slaves.

The calibration block **490** calibrates and tunes each antenna to maximize power. It matches the impedance of each antenna with its rectifier. The configuration block **492** controls the calibration block. Since these blocks also need power, some embodiments initially power up a small portion of the circuits. For instance, one or more of the antenna sub-elements receive the RF power. The signal is then rectified (by the rectifier **493**), the power absorbed, and converted to a supply voltage, Vdd, for a small power absorber, and stored it in a small capacitor **494**. This supply voltage is then provided to the slave's configuration **492** and calibration blocks **490**. The calibration block calibrates the matching of each antenna or frequency times to the master's frequency each of the antennas in some embodiments. The power generator has a rectifier **495** for each of the antenna sub-element **499** signals. A summer **471** then sums the output of all rectifiers **495**. The configuration block monitors each antenna signal (before the power generator's rectifiers as shown in FIG. **4**, although it could also monitor after the rectifiers). The configuration block then controls the calibration block to change the antenna tuning in order to maximize the signals. Once the power generator's Vdd reaches a pre-set level the configuration block uses a switch **496** to provide the power to the rest of the system, such as the processing module **483**, the RF transceiver **480**, and any other modules (e.g. network card module if there is one in the slave). If the slave has a battery **497** the switch is also used in some embodiments to enable battery charging only, or enable battery charging and power-up together so that the slave is able to communicate while the battery is charging. The battery block has associated circuitry to measure its parameters and prevent overcharging. The battery block also includes a regulator and a battery charger unit in some embodiments. For most consumer electronics devices these changes could be incorporated into their battery packs. The slave in some embodiments also has a power management module **498** which performs functions to increase the battery life of the device. For instance, the power management unit in some embodiments puts certain modules in sleep or idle mode, and/or use frequency and voltage scaling to reduce power consumptions.

The calibration block also has a backscattering transceiver in some embodiments. If the RF transceiver is not powered on and the slave needs to communicate back to the master the calibration block uses antenna modulation in the form of backscattering (e.g. acknowledgement that it received data, or transmission of information like MAC ID, name, etc.). The received signals at the slave also include control information, where the master uses a control channel to inform the slaves what to do. The slave's control channel will demodulate and extract the commands for the slave to execute. Control information also includes read commands, write commands, turn on and off commands for the RF transceiver, scheduling for sending and receiving data, configuration and calibration of software radios for different standards.

In some embodiments, the slave stores identifying information about masters (or networked servers) that are authorized to charge the slave, such as the masters' media access control address (MAC ID), network IP address, name, serial number, product name and manufacturer, capabilities, etc. This information is stored in its memory **474** or in its configuration block **492**. The slave requests identifying information from the master or the network server **135**. The master (or the network server) is also proactive in some embodiments and sends its identifying information to the slave. Identifying information about the masters is stored in a networked database **150** in some embodiments. The slave in some embodiments checks the master's information with its authorized list and if there is not a match the configuration block **492** controls the switch **496** so power does not reach some or all of its circuits and/or battery.

The charging application is for distances of 1 meter or less. The energy efficiency of the system is the efficiency of the transmitter (DC to RF conversion) and the receiver (RF to DC conversion). The path loss is proportional to the inverse of the distance squared and inverse of the frequency squared. For instance at 60 GHz, at a distance of 1 meter the path loss is 64 dB. Thus, if the master transmits 100 mW the receiver gets about 20 dBm, since there is little loss. The conversion of this received RF to DC has about 10-20% efficiency, which translates into 10-20 mW.

This method is used both to charge the slave device and to send data to it in some embodiments. The higher carrier signal frequency enables the use of much smaller antennas. Because the antennas are small, in some embodiments the master devices (and even slave devices) have a number of antennas so that orientation with the charger can vary. When the slave has directional antenna, power efficiency is greatly enhanced. Power efficiency is also most optimal when the antenna of the master and slave are pointing directly towards each other.

In some embodiments, the master is a device (e.g. a PC) that has AC power or has a number of batteries and the slave (e.g. cell phone) has a battery that may require charging. Charging is either initiated by the slave or by the master. For example, the user places the slave near the master and presses a button on either the master or the slave to initiate charging (or charging is initiated after the master polls the slave). The slave makes a digital request to the master to be charged. Each antenna on the master receives a DC current. However, the antenna that is pointing to the slave device's antenna will receive the largest current. Each of the master's antennas effectively acts as a USB port since the antennas are used for communication as well as charging. If there are more than one slave then the master in some embodiments powers up all of them if need be and communicate with all of them using multiplexing. This eliminates the need for the master device to have multiple USB polls. Specifically, currently for each device there is a need for one USB port. For example, there is one for the mouse, one for the keyboard, one for a memory stick, etc. Using the embodiments of the current invention, they can all share the same wireless communication link with multiplexing for communication. For a USB type slave device that has no battery the master just acts like a remote battery so that the slave is able to communicate. For a more powerful slave device, such as a cell phone, the master acts like a charger and a communication device. If the stave has sensors (e.g. temperature, gyrator, pressure, and heart monitor) with electronic cir-

cuitry then they are powered up by the master, perform their sensing functions and communicate their data to the master, a network server, or some other device. In some embodiments, either or both the master and the slave have a touch screen and/or keyboard. For example, the master's keyboard is used for input and its touch screen is used for both input and output. Input data is then communicated to the slave. Likewise, when the slave has a keyboard and/or touch screen, input data is displayed on the slave's screen and is optionally communicated to the master.

FIG. **5** conceptually illustrates a process **500** for master-slave charging and communication in some embodiments of the invention. The exact sequence of events and command/information flows depends on whether the master or the slave initiates the communications. The commands are mostly transmitted over the control channel that uses a simpler modulation (e.g. AM, FM) than the data channel (although some embodiments send commands over the data channel). Channel coding is an optional step prior to modulation to improve data transmission and recovery under noisy conditions.

As shown m FIG. **5**, the master powers-up (at **505**) the slave. The power up is initiated by either the master or by the slave. For instance: (a) the slave makes a request for power (e.g. user presses a button on the slave for power or a low power slave automatically requests to be charged provided it has a battery charge, (b) the slave does not have charge, but the master polls the slave (either regularly or by manually pressing a button on the master) and then the slave requests power (c) the master detects the slave when it gets close to it, polls it and then the slave requests power. In some embodiments, when the master has AC power, the master goes to discovery mode where it polls frequently and goes off. In some embodiments, when a master has battery, the master goes to discovery mode and if it finds no slaves it slowly backs off (for instance going from 1 minute polling interval to 2 minute polling interval, then to 3 minute polling interval, etc.)

Next, slave sends (at **510**) request for power. Master receives the slave's request for power, demodulates (at **515**) it, and in response generates (at **520**) an RF wave. In some implementations the master automatically charges the slave or have some charging rules (e.g. if battery charge of slave is less than 50% then charge slave automatically). In these embodiments, operations **510** and **515** are skipped.

The slave receives the RF wave from the master, and the slave's power generator component converts the RF wave energy to a supply voltage. This is used (at **525**) to power-up the slave, charge its battery if it has one, or both. The slave then transmits (at **530**) information about itself (or its surrounding if it is a sensor) or makes (at **530**) requests. The slave optionally codes the information before modulation in some embodiments. For instance, the slave transmits information such as "I am this particular device", "I have data to be read", "I need to be charged", etc. Active slaves (e.g. cell phones or toys with batteries) use the power of the master instead of their own battery in some embodiments.

The master then receives and demodulates (at **535**) the slave's information/request (and decodes if necessary). The master's processing module determines (at **540**) whether the master continues the session. When the master determines that the session shall not be continued, the session is stopped (at **545**). When the session continues, the master's processing module generates (at **550**) commands (e.g. read from memory, write to memory, put into idle energy state, or other specific commands) which are optionally coded and modulated by the master's transceiver and transmitted.

The slave receives the master's signal, demodulates (at **555**) the received signal, and decodes the signal if necessary. Next, the slave executes (at **560**) the command (e.g. read, write, idle, specific command). In some embodiments, the slave optionally codes (at **565**) status information. The slave then modulates (at **565**) and transmits (at **565**) status information or other requests back to the master (e.g. the read data, write successful status, command successful status, acknowledgements). The master demodulates (at **535**) the slave's transmission and its processing module determines if it continues the session (decision to continue is possibly based on the information sent by the slave). In some embodiments, the slave's status transmission information includes low battery/charge information or requests for charging (at **565**), and the master's processing module processes the information/requests and charges the slave (at **535**).

FIG. **6** conceptually illustrates a master with different transmitters for power generation and communication in some embodiments of the invention. One transmitter of each type is shown for simplicity. As shown, the master **605** includes two separate transmitters (possibly with different frequencies) that are used for power generation and communication. The power transmitter **610** performs the function of a dedicated battery for the slaves. In some embodiments the power transmitter has narrow bandwidth but is high power compared to the communication transmitter or more wideband transmitters. A more focused antenna beam and a higher power transmitter increase the power transfer to the slave. The communication transmitter **615** and the power transmitter **610** in some embodiments have different frequencies from while in some embodiments the two transmitters have the same frequencies. In some embodiments, the frequencies are Federal Communications Commission (FCC) approved. The attenuator **620** prevents the transmitter from overloading the receiver **630** and allows the receiver to receive when the communication transmitter transmits. The transceiver's transmitter and receiver use a duplexer **650** that allows bi-directional communication over a single channel and antenna. In some embodiments, the filter **625** is chosen such that it rejects the power frequency but allows the communication frequency. A duplexer or combiner/de-combiner **635** is used with a single antenna **640**.

FIG. **7** conceptually illustrates a master and a slave that each includes separate antennas/transceivers for power generation and for communication in some embodiments of the invention. For simplicity, only one antenna/transceiver of each type is shown. As shown, the master **705** includes an antenna **715** and a transceiver **720** for power generation. The master also includes an antenna **725** and a transceiver **730** for communication. Similarly, the slave **710** includes an antenna **735** and a transceiver **740** for power generation and an antenna **745** and a transceiver **750** for communication. Thus, the antenna used for power generation has a directional focused beam pattern and is used with a high frequency to generate power at the slave. The control channel runs on the power transmitter's channel in some embodiments while the control channel runs on the communication transmitter's channel in other embodiments.

FIG. **8** conceptually illustrates a master in some embodiments that uses beam steering to change the direction of the beam when the slave is not directly in front of its beam of the invention. As shown, the master **805** has four antennas **810-825**. Slave A **830** is directly in front of antenna **810** and receives most of the energy of the RF beam of that antenna without any steering of the beam. Slave B **835**, however, is located at all angle to all of the master's antenna beams. The

efficiency of the system is less when the slave is positioned at an angle to the main beam's antenna. However, antenna **810** and **815** use beam steering to target the antenna of slave B **835**.

Furthermore, using both antennas **810** and **815** improves efficiency because the power generator of slave B **835** uses the energy simultaneously received from both antennas to generate a supply voltage. Once slave B **835** is powered up it uses one of the antennas for communication (e.g. the antenna with the more reliable signal or the stronger signal). As described by reference to FIG. **1** above, more than one master (either simultaneously or separately) charge a single slave (e.g. masters B **115** and C **120** charge slave **6** in FIG. **1**) or several slaves in some embodiments. In some embodiments the masters communicate with each other or alternatively a network server or remote user configures them to change their beam steering and other system parameters such that they maximize power transfer to a single slave or a plurality of slaves.

FIG. **9** conceptually illustrates a multi-antenna RF master in some embodiments of the invention that has a non-conductive spacer material (e.g., plastic) in front of its antenna **915**. This spacer **910** is used to enable the slave **920** to sit on it or get close to it. This creates a separation distance of several wavelengths between the master **905** antennas **915** and the slave **920** antennas **940** so that RF is used for charging. For instance, for a single antenna a separation of two or more wavelengths is needed. For multiple antennas more wavelengths are required, the number of which increases with the number of antennas for optimal beam forming. This could for example be used for wireless charging and wireless USB communication (since each of the master's antennas effectively acts as a USB port that is used for communication as well as charging). Without the separator the slave and the master could be too close to each other because of the short wavelengths of high frequency RF. If the master and the slave are too close to each other, some embodiments use induction charging instead of RF charging. Although FIG. **9** shows one slave antenna and several master antennas, in different embodiments of the invention either the slave or the master has one antenna, many antennas, or one or more antennas with sub-elements. In some embodiments, a slave has a non-conductive spacer material (e.g., plastic) in front of its antenna **940** (not shown) to enable the slave to sit on the master or come close to it.

III. Charging with Induction

FIG. **10** conceptually illustrates a master that uses induction to charge and communicate with a slave in some embodiments of the invention. The master **1005** supplies its primary coil **1010** with an alternating current, thereby creating an AC magnetic field. This magnetic field generates a voltage across the receiver's coil **1015**, which is rectified and smoothed with capacitors (not shown), and used for charging and communication. The power source for the master in different embodiments is an AC source that is converted to DC by an adaptor **1070**, a battery, or other mechanisms (e.g. induction from another master induction charger). A selection switch **1060** in some embodiments selects amongst the different power source options and provides the Vdd to the master's power transmitter. In some embodiments, the power transmitter **1020** uses a Phase Lock Loop (PLL) **1025** that uses a crystal's frequency to synthesize a new frequency. Alternatively, the power generator in some embodiments uses a Direct Digital Frequency Synthesizer (DDFS). The power transmitter then uses a Power Amplifier (PA) **1030** to drive its coil. In the embodiments shown in this figure and the other following figures that illustrate induction, one end of the coil is connected to the PA with the other end grounded. However, some embodiments use a differential coil where the two ends of the coil are connected to the + and − input of the PA. If no modulation is used, the transmitted energy is used to charge a slave through induction of the slave's coil. But if the transmitted signal is modulated (amplitude, frequency, phase or a combination) the signal is also used to transmit data as well as power in some embodiments. In some embodiments, when the transmitter is not sending data it just charges the slave **1035** or the slave communicates back on the same frequency or a close frequency. The slaves use backscattering to send information to the master. When the master is in receiving mode, the signal coming from its coil to the receiver is detected. The signal level is adjusted by an attenuator **1040** and a power amplifier **1045**. The detector **1050** then demodulates the signal. The resulting data is then passed on to the processing module **1055** that has a digital signal processing unit, a processor and memory, as well as a networking card (not shown).

FIG. **11** conceptually illustrates a master in some embodiments of the invention that uses the power transmitter for charging, and a separate transmitter for data transmission. Other components of FIG. **11** are similar to FIG. **10**. In some embodiments this data transmitter **1110** functions similar to Near Field Communication (NFC) since NFC also uses induction over very short distances for communication. FIG. **11** shows two separate coils **1115** and **1120** for the power transmitter and the data transmitter respectively. However, some embodiments have one physical coil used for both transmitters, where the power transmitter uses the entire coil and the data transmitter uses all or a smaller section of the same coil. This has the advantage of reducing the number of coils.

FIGS. **10** and **11** show the master with one coil per transmitter. However, in some embodiments the master has a number of coils so that the master charges and communicates with several slaves, or is able to transmit more power. For instance, networked masters in some embodiments have coils that are built-in to conference room tables and marked so that meeting participants can wirelessly charge their devices, connect to each other or to the Intranet/Internet, and transmit/receive information (this also applies to RF beam chargers where RF beam chargers such as master devices shown in FIGS. **2-4** and **6-9** are built-in to conference room tables and marked so that users can wirelessly charge their devices, connect to each other, connect to a networked server or to the Intranet/Internet, and transmit/receive information). Alternatively, the master has the form factor of a light weight pad that is used at home, in the car, on the go, or at work to charge and communicate with a number of devices. Such multi-coil or RF beam masters, tables or pads are smarter in some embodiments and have additional dedicated functions that resemble a small computer. For instance, in some embodiments they have a credit card reader so that users of slaves are not only able to charge their devices but also make payment transactions. Thus, a subset of the coils (or antennas) is dedicated to interface with near field communication (NFC) devices. For example, in some embodiments of the invention phones with NFC capabilities are not only charged but they are also used for contactless payment so that the user places the phone near those coils (or RF beams of a master in the case of RF-based master) in order to get authenticated and transmit payment information to a secured server on the Internet. Alternatively, credit cards in some embodiments have a chip so that they transmit their information to the master device. The

users may also choose to enter the payment information manually if they choose to do so. Some of the master's coils (or RF beam of a master in the case of RF-based master) are dedicated and optimized for communication, instead of having all coils be responsible for charging and communication in some embodiments. Likewise, some coils are dedicated and optimized for charging in some embodiments. These multi-coil masters, tables or light-weight portable pads use either a wireline or wireless connection to connect to the Internet, or an Intranet. They use their connection in some embodiments to communicate with a fax/printer for faxing and printing functions. In some embodiments these multi-coil masters, tables or light-weight portable pads charge a cell phone and then use the cell phone's networking functions (cellular, Wi Fi, Bluetooth®) to connect to an Intranet/Internet/server for authentication, web browsing, secure transaction, printing/faxing, etc. In other embodiments a tablet device (such as an IPad®) has a light-weight pad attached to it such that the tablet is wirelessly charged and then become a wireless charger to charge a cell phone. In other embodiments multi-coil masters, tables or light-weight portable pads have photocells to get charged and then charge other devices such as cell phones wirelessly. In yet other embodiments light-weight portable pads have USB or other types of ports for charging and communicating with other devices in a car (both wired or wirelessly). Such pads also have built-in GPS and Wireless LAN functionality in some embodiments.

If a master device has an array of n coils all n coils are used to charge and communicate with one slave in some embodiments, or all n coils are used for a number of slaves in some embodiments. The same channel is used for power transfer and then communication in some embodiments. In some embodiments, every coil has a built-in transceiver. In other embodiments a subset of the coils has built-in transceivers. During a calibration and configuration stage the master and the slave exchange information in order to get to know each other. For example, the master instructs which slaves should be on or off in some embodiments. Frequency and time hopping are coordinated between the master and the slaves in some embodiments for selection amongst a plurality of slaves, as well as additional security. Thus, the master transmits configuration information to the slaves, such as coil frequency and hopping algorithms. The slaves send back acknowledgements or the data to make sure they received it correctly. The slaves also transmit their voltage and current requirements to the master in some embodiments. If a coil at position P at time t has frequency f then it can be represented by (f, t, P). Frequency hopping is a method where each coil in the matrix of coils is driven by a different frequency f at different time periods. For example coil **1** has frequency f**1** for t**1** seconds, frequency f**2** for t**2** seconds, etc. Time hopping is the process where each coil in the matrix is turned on and off at different time periods.

FIG. **12** conceptually illustrates a master **1205** that has a power transmitter for each of its coils **1210** in some embodiments of the invention. Thus, each coil (or a subset of the coils) has a different frequency to implement frequency hopping. In some embodiments, the master **1205** also makes the power on each transmitter **1215** on and off to have time hopping. Other components of the master (which in different embodiments are similar to components shown in FIG. **10**, **11**, or **20**, or **21**) are not shown for simplicity. FIG. **13** conceptually illustrates a master in some embodiments with coils **1310** that have the same frequency and a multiplexer **1315** to activate coils at different times. The PLL **1320** in some embodiments also change the frequency if the master wants to have both frequency and time hopping. Other components of the master are not shown for simplicity.

FIG. **14** conceptually illustrates induction in some embodiments between the master and the slave by using more than one coil on the master or the slave in order to increase power and communication efficiency. Other components of the master (which in different embodiments are similar to components shown in FIG. **10**, **11**, or **20**, or **21**) are not shown for simplicity. As shown, the master **1405** includes four coils **1410-1425**, slave A **1430** includes two coils **1435-1440**, and slave B **1445** includes one coil **1450**. As shown in the example of FIG. **14**, slave A's two coils **1435-1440** couple with one coil **1410** on the master **1405**. Likewise, the master's coils **1415-1425** couple with slave B's one coil **1450**. In the general case in some embodiments X coils on the master couple with Y coils on the slave. In some embodiments, coupled master coils such as **1415-1425** have the same frequency. In other embodiments, the coils have different frequencies f**1**, f**2** and f**3**. In these embodiments, the frequencies are within the bandwidth of the transformer system so that they couple and their power is added together.

In some embodiments, both the master and the slave have a matrix of coils. Different embodiments arrange the coils differently, for instance matrix of coils are arranged in 1D (one line), 2D (a plane), or 3D (multiple planes covering a volume). Some embodiments arrange the coils in different patterns (rectangular grid, triangular grid, circular grid, hexagonal grid, irregular grid, etc). The master then requests the slave's coil patterns. The slave sends it coil pattern to the master. The master then activates a subset of its coils in order to generate a transmit coil pattern that transfers maximum power to the slave. The slave then informs the master how much power each of its coils receives. The master then changes it's transmit coil pattern in order to optimize power transfer to the slave. In some embodiments this process is repeated until optimum power transfer is achieved.

FIG. **15** conceptually illustrates a process **1500** of some embodiments of the invention to change a master device's coil pattern in some embodiments of the invention. As shown, process **1500** receives (at **1505**) the slave's coil pattern. Next, the process activates (at **1510**) some or all of master coils in order to transmit maximum induction power to the salve's coils.

Next, the process receives (at **1515**) information regarding the amount of power each slave coil receives. In different embodiments, the master receives this information from the slave (1) using RFID and backscattering techniques, (2) through RF data transmission from the slave's RF antennas, or (3) through data transmission from one or more of the slave's coils.

The process then determines (at **1520**) whether on optimized power transfer is achieved (e.g., when the rate of power transfer satisfies a certain threshold). When the process determines that optimized power transfer is achieved, the process continues (at **1530**) induction power transfer using the same coil pattern. The power transfer continues until a set of predetermined criteria (e.g., a certain amount of time elapses a signal is received from the slave, slave's coil impedance changes, etc.). The process then exits.

Otherwise, when the process determines that optimized power transfer is not achieved, the process changes (at **1530**) the transmit coil pattern. The process then proceeds to **1515** which was described above.

FIG. **16** conceptually illustrates a multi-coil slave with induction charging in some embodiments of the invention. FIG. **16** shows a general diagram of a slave device **1605** that

has M coils **1610**. While in some embodiments slave devices have one coil in other embodiment (such as the embodiment shown in FIG. **16**) have more than one coil. As shown, a P number of coils are used for power absorption and an N number of coils are used for data communication, where P≤M and N≤M and P+N=M. The system is reconfigurable so that the numbers P and N are changed so that different numbers of coils are used for power and data communication as needed. When a slave comes close to a master the master detects a change in its load. The master then gives power to the slave. The AC magnetic fields generated by the primary coils of the master charger generate voltages across the coils of the slave. The power harvester **1615** rectifies and smoothes these voltages and its output are used for charging and power. As shown, the power harvester **1615** is connected to the coils through the front-end switching block **1690**. Initially, a small portion of the circuits, such as the calibration and configuration block **1620**, are turned on with DC power from the power harvester. Then the master uses data modulation or some other modulation method to send configuration information to the slave's calibration and configuration block. This configuration information includes one or more of the master's frequency, master's data and modulation method, and master's identifying information. The slave's calibration and configuration block monitors **1620** the signal before or after the power harvester **1615** and uses the configuration information together with tuning, calibration, and impedance matching of each coil with its rectifier (not shown) to maximize the signal. After the signal is maximized then the slave's calibration and configuration block adjusts a switch **1625** so that power becomes available for the battery **1630** (if the slave has one) and/or other circuits such as the data transceiver **1635** and the processing module **1640**. The battery block **1630** has associated circuitry to measure its parameters and prevent overcharging. The battery block **1630** also includes a regulator and a battery charger unit (not shown) in some embodiments. A voltage converter **1650** is used to provide different voltage levels as required by the different slave modules. The slave in some embodiments also has a power management module **1655** to increase the battery life of the device.

In some embodiments the slave stores identifying information about masters (or networked servers) that are authorized to charge it. This is stored either in the slave's calibration and configuration block or the slave's memory (not shown). The slave checks the configuration information sent from the master to the slave for the master's identifying information. If the information is not included the slave requests it. The slave then checks this information with the authorized list and if there is not a match the slave's calibration and configuration block disables charging and/or power-up by controlling the position of the switch.

The slave's data transceiver **1635** is reconfigurable so that K transmitters **1665** and P receivers **1670** are used. For instance, more than one transmitter in some embodiments is used to drive a single coil. Likewise, more than one receiver in some embodiments is used to receive from a single coil. In some embodiments, a master device has a similar configuration. If the slave is only charging its battery, once the battery is charged the slave in some embodiments disables its coil(s) or changes its impedance so that the master knows the slave does not need more power for charging. During data communication the load modulation unit **1660** modulates the load for the coils. When the load on the slave's coils changes then the system acts like a transformer and the same effect is shown on the transmitter's coils through coupling. The changes required to implement this system can be incorporated into the battery pack of most electronics systems (conventional battery packs typically include rechargeable batteries that use AC power adapters. These battery packs could be changed to include the components of FIG. **16** instead).

The slave in some embodiments optionally has sensors **1675** with electronic circuitry. Once the slave is powered up the sensors perform their sensing functions and communicate their data to the induction charger, another master, or a network server. Some examples of sensors are temperature, gyrator, pressure, and heart monitor. The master and the slave in some embodiments optionally have a touch screen and/or keyboard for entering data which is displayed on the screen and/or communicated, respectively, to the slave and the master.

FIG. **17** conceptually illustrates a process **1700** for reconfiguring coils of a slave device in some embodiments of the invention. As shown, the slave optionally receives (at **1705**) induction power for a certain period of time from the master to power up some or all of the slave's circuitries. In some embodiments, when the slave initially has more than a certain amount of power, operation **1705** is skipped.

Next, the process receives (at **1710**) configuration information from the master. The master configuration information includes one or more of the master's operating parameters such as the operating wireless communication frequency of the master (which is used for communication between the master and slave), master's data and modulation method, and master's identifying information. The process then reconfigures (at **1715**) the slave's coils by using the received configuration information and one or more tuning, calibration, and impedance matching to maximize the received induction power. Coarse calibration and fine tuning are performed in some embodiments to ensure that all elements on the master and slave have the same frequency and are tuned for it. Likewise, impedance matching is performed in some embodiments such that the master and the slave are matched for communication. The process then receives (at **1720**) induction power from the master device until the generated power in the slave reaches a certain threshold. The process then exits.

FIG. **18** conceptually illustrates a process **1800** for terminating power generation in the slave in some embodiments of the invention. As shown, the process receives (at **1800**) power through the induction. Next, the process determines whether enough power is generated to satisfy a certain threshold. For instance, the process determines whether a battery or a capacitor in the slave is charged to a certain voltage level.

When the generated power does satisfy the threshold, the process proceeds to **1805** to continue receiving power through induction. Otherwise, the process either disables the coils (e.g., by turn a switch on or off) or changes the coils impedances as a signal to the master device to stop transmitting induction power. The process then exits. Some embodiments use a similar process to terminate generation of power through conversation of RF energy using a similar process as process **1800**. In some of these embodiments, the slave's voltage converter **477** is disconnected from the slave's power generator **473** antennas is disconnected from the slave's power transceiver. In other embodiments, the slave's antennas **499** are turned off.

FIG. **19** conceptually illustrates a process **1900** for configuring the slave's coils for either power generation or data transmission in some embodiments of the invention. As shown, the process configures (at **1905**) salve's coils to use

some or all of the coils for receiving power through induction and some or none of the coils for data transmission.

Next, the process receives (at **1910**) power through induction at the slave's coils. Next, the process determines (at **1915**) whether enough power is generated at the slave to satisfy a certain threshold. For instance, the process determines whether a battery or a capacitor in the slave is charged to a certain voltage level. When the generated power has not satisfied the threshold, the process proceeds to **1910** to receive more induction power. Otherwise, the process reconfigures the coils that are used for power generation and data transmission. For instance, when the power in slave reaches a maximum threshold, no coils are used for power generation and some or all coils are used for data transmission. As another example, when the power reaches a certain threshold, the number of coils used for data transmission is increased and the number of coils used for power generation is decreased. In this example, power generation through induction continues until the power level reaches a maximum threshold.

IV. Charging with Both RF and Induction in a Hybrid Configuration

Although the embodiments discussed by reference to FIGS. **1-19** described masters with either coils or RF antennas, the invention is not restricted to these embodiments. Specifically, in some embodiments, both the master and the slave have induction coils and RF antennas.

For instance, in some embodiments a master as shown in FIGS. **1-4** and **6-9** in addition to RF antennas has coils and associated circuitry as shown to any of FIGS. **10-14**. Also, in some embodiments a slave as shown in FIGS. **1-4** and **7** in addition to RF antennas has coils and associated circuitry as shown in FIGS. **12-16**. Because the induction frequency and RF frequencies are far apart, each element (i.e. each master and slave element) is calibrated to have two different operating frequencies, one for induction and one for RF.

FIG. **20** conceptually illustrates a hybrid system of some embodiments of the invention where the master uses an induction charger as a power source to power itself and then uses a high frequency directional and focused RF beam to power up one or more slave devices and communicate with them. As shown, the master **2005** includes a rechargeable power supply **2010**, a power harvester **2015** and a coil **2020**. The induction charger **2025** has a power source (AC power, battery, etc). The power is connected to the induction charger's power transmitter **2035** (e.g., after an AC source is converted to DC through an adaptor **2080**), which is connected to a primary coil **2040** with a reference ground point **2045**. When the master's secondary coil is close to the charger's primary coil it receives power through inductance and its power harvester **2015** charges the master's rechargeable power supply **2010**. The master then uses a high frequency directional RF beam to power up one or more slave devices **2050** (or charge the slave device's battery if it has one) and communicates with it, as discussed by reference to FIG. **2-4**. FIG. **20** shows only one embodiment of induction charging, and there are other implementations and methods as discussed herein.

FIG. **21** conceptually illustrates a master in some embodiments of the invention that acts as an induction charger and uses induction to charge the slave before using its high frequency directional beam to communicate with the slave. The master **2105** has access to power (AC power or battery). The master's power is connected to a power transmitter **2110** that uses a multiplexer **2115** to power a matrix of coils **2120**. This is similar to the arrangement shown in FIG. **13**, although each coil or a subset of coils may also have their own individual power transmitters (as in FIG. **12**). The slave **2125** includes a voltage converter **2130**, a rechargeable power supply **2135**, a power harvester **2140**, a matrix of coils **2145** and other blocks of FIG. **16** that are not shown for simplicity (e.g. calibration and configuration block). When the master's primary coils are close to the slave's coils the slave receives power through inductance. The master then uses a high frequency directional RF beam to communicate with the slave. FIG. **21** shows only one embodiment of induction charging, and there are other implementations and methods as discussed herein.

FIG. **22** conceptually illustrates two slaves in some embodiments of the invention that use the power of a master's coils to power up or charge their batteries and then communicate with each other using their communication transceivers. As shown, the two slaves **2205** and **2210** are placed on or near a master **2215** induction charger. An example of such an embodiment (without any limitations) is: slave A **2205** is a cell phone, slave **2 2210** is a memory stick with data, and the master is a PC with an induction pad. The two slaves use the power of the master's coils **2220** to power-up or charge their batteries (not shown). The two slaves then use their RF transceiver (not shown) with directional beams (or any other communication transceiver) to communicate directly with each other. In other embodiments, the two slaves use the master and induction coupling to communicate with each other. For instance, where one or both of the slaves do not have an RF communication transceiver and slave A wants to communicate with stave B, Slave A uses induction coupling with the master to send its request for slave B to the master. The master uses induction coupling to communicate that request to slave B. Slave B then uses induction coupling to reply to the master, and the master uses induction coupling to forward the reply to slave A. In some embodiments more than two slaves get charged and communicate with each other. A network server **2225** in some embodiments controls the master and the slaves through a network **2230**.

The description so far has discussed induction charging and focused RF beam as separate embodiments. FIG. **21** did discuss a master that uses induction for charging and RF for communication. That role is reversed in some embodiments of the invention where RF is used for charging and induction is used for communication. But it is possible to view the coil and the RF antennas as elements. In some embodiments one element is designed for the master, slave or both so that at low frequencies the element is like a coil inductor and at high frequencies it is like an antenna. This means that at the same time one has RF power and induction power. Low frequencies mean big coils and high frequencies mean small coils. If the distance is far enough (e.g., more than 2-3 wavelengths) compared to the signal wavelength then waves are created and the element is used for RF. If the distance is short then waves cannot be created and it will be more like induction. So distance is used to select one mode or the mode is chosen automatically. In other embodiments the master, slave or both have two different elements for different distances (one for short distances and one for far distances). In these embodiments, the master does time multiplexing between the two or select one over the other. This depends on the slave and whether it has each element for induction and RF antenna. If the master is charging and communicating with a group of antennas then the selection of induction or RF depends on the configuration of the slaves as to which ones have induction, antenna or both.

FIG. **23** conceptually illustrates an element **2300** in some embodiments of the invention that is designed to be a single

coil **2305** at low frequencies and a multiple antenna sub-elements **2310** at high frequencies with beam forming capabilities. The element in some embodiments physically resembles a coil. In some embodiments, the length of the coil is much bigger than the size of antenna required for RF at high frequencies. For instance in the frequency range of 50-60 GHz the element is of the order of centimeters, whereas the antenna sub-elements are of the order of millimeters. The element is divided into multiple RF antennas sub-elements and these multiple antenna sub-elements are used to do beam forming. Each sub-element is of the order of half a wavelength or less and operates at two separate frequencies, one lower frequency for the coil **2305** and one higher frequency for the antenna **2310**. Each sub-element has an associated port **2315** that is frequency dependent (e.g. a capacitor or an LC circuit) such that at high frequency the sub-element acts as an antenna, but at low frequencies the sub-elements act as one connected coil. In FIG. **23**, these ports **2315** are not shown for the low frequency operation to emphasize that the element **2300** acts as a single coil **2305** in low frequencies. All of the discussions throughout this specification regarding slave and master configuration and control and communication apply to embodiments that use the element shown in FIG. **23**. For instance, in some embodiments, the element is used in one or more of the master and slave devices shown in FIGS. **1-4**, **6-14**, **16**, and **20-22**. Also, one of the antennas **2300** is used for control and communication in some embodiments. In other embodiments, all antennas are used for control, communication and power. If low frequency and high frequency are used at the same time the communication channel in some embodiments is RF or induction or both.

V. Computer System

Many of the above-described processes and modules are implemented as software processes that are specified as a set of instructions recorded on a computer readable storage medium (also referred to as "computer readable medium" or "machine readable medium"). These instructions are executed by one or more computational elements, such as one or more processing units of one or more processors or other computational elements like Application-Specific ICs ("ASIC") and Field Programmable Cate Arrays ("FPGA"). The execution of these instructions causes the set of computational elements to perform the actions indicated in the instructions. Computer is meant in its broadest sense, and can include any electronic device with a processor (e.g., moving scanner, mobile device, access point, etc.). Examples of computer readable media include, but are not limited to, CD-ROMs, flash drives, RAM chips, hard drives, EPROMs, etc. The computer readable media does not include carrier waves and/or electronic signals passing wirelessly or over wired connection.

In this specification, the term "software" includes firmware residing in read-only memory or applications stored in magnetic storage that can be read into memory for processing by one or more processors. Also, in some embodiments, multiple software inventions can be implemented as parts of a larger program while remaining distinct software inventions. In some embodiments, multiple software inventions can also be implemented as separate programs. Finally, any combination of separate programs that together implement a software invention described herein is within the scope of the invention. In some embodiments, the software programs when installed to operate on one or more computer systems define one or more specific machine implementations that execute and perform the operations of the software programs.

FIG. **24** conceptually illustrates a computer system **2400** with which some embodiments of the invention are implemented. For example, the masters, slaves, network servers, access points, and processes described above by reference to FIGS. **1-23** may be at least partially implemented using sets of instructions that are run on the computer system **2400**.

Such a computer system includes various types of computer readable mediums and interfaces for various other types of computer readable mediums. Computer system **2400** includes a bus **2410**, at least one processing unit (e.g., a processor) **2420**, a system memory **2430**, a read-only memory (ROM) **2440**, a permanent storage device **2450**, input devices **2470**, output devices **2480**, and a network connection **2490**. The components of the computer system **2400** are electronic devices that automatically perform operations based on digital and/or analog input signals. The various examples of user inputs described above may be at least partially implemented using sets of instructions that are run on the computer system **2400** and displayed using the output devices **2480**.

One of ordinary skill in the art will recognize that the computer system **2400** may be embodied in other specific forms without deviating from the spirit of the invention. For instance, the computer system may be implemented using various specific devices either alone or in combination. For example, a local Personal Computer (PC) may include the input devices **2470** and output devices **2480**, while a remote PC may include the other devices **2410-2450**, with the local PC connected to the remote PC through a network that the local PC accesses through its network connection **2490** (where the remote PC is also connected to the network through a network connection).

The bus **2410** collectively represents all system, peripheral, and chipset buses that communicatively connect the numerous internal devices of the computer system **2400**. In some cases, the bus **2410** may include wireless and/or optical communication pathways in addition to or in place of wired connections. For example, the input devices **2470** and/or output devices **2480** may be coupled to the system **2400** using a wireless local area network (W-LAN) connection, Bluetooth®, or some other wireless connection protocol or system.

The bus **2410** communicatively connects, for example, the processor **2420** with the system memory **2430**, the ROM **2440**, and the permanent storage device **2450**. From these various memory units, the processor **2420** retrieves instructions to execute and data to process in order to execute the processes of some embodiments. In some embodiments the processor includes an FPGA, an ASIC, or various other electronic components for execution instructions.

The ROM **2440** stores static data and instructions that are needed by the processor **2420** and other modules of the computer system. The permanent storage device **2450**, on the other hand, is a read-and-write memory device. This device is a non-volatile memory unit that stores instructions and data even when the computer system **2400** is off. Some embodiments of the invention use a mass-storage device (such as a magnetic or optical disk and its corresponding disk drive) as the permanent storage device **2450**.

Other embodiments use a removable storage device (such as a floppy disk, flash drive, or CD-ROM) as the permanent storage device. Like the permanent storage device **2450**, the system memory **2430** is a read-and-write memory device. However, unlike storage device **2450**, the system memory **2430** is a volatile read-and-write memory, such as a random access memory (RAM). The system memory stores some of the instructions and data that the processor needs at runtime.

In some embodiments, the sets of instructions and/or data used to implement the invention's processes are stored in the system memory **2430**, the permanent storage device **2450**, and/or the read-only memory **2440**. For example, the various memory units include instructions for processing multimedia items in accordance with some embodiments.

The bus **2410** also connects to the input devices **2470** and output devices **2480**. The input devices **2470** enable the user to communicate information and select commands to the computer system. The input devices include alphanumeric keyboards and pointing devices (also called "cursor control devices"). The input devices also include audio input devices (e.g., microphones, MIDI musical instruments, etc.) and video input devices (e.g., video cameras, still cameras, optical scanning devices, etc.). The output devices **2480** include printers, electronic display devices that display still or moving images, and electronic audio devices that play audio generated by the computer system. For instance, these display devices may display a graphical user interface (GUI). The display devices include devices such as cathode ray tubes ("CRT"), liquid crystal displays ("LCD"), plasma display panels ("PDP"), surface-conduction electron-emitter displays (alternatively referred to as a "surface electron display" or "SED"), etc. The audio devices include a PC's sound card and speakers, a speaker on a cellular phone, a Bluetooth® earpiece, etc. Some or all of these output devices may be wirelessly or optically connected to the computer system.

Finally, as shown in FIG. **24**, bus **2410** also couples computer **2400** to a network **2490** through a network adapter (not shown). In this manner, the computer can be a part of a network of computers (such as a local area network ("LAN"), a wide area network ("WAN"), an Intranet, or a network of networks, such as the Internet. For example, the computer **2400** may be coupled to a web server (network **2490**) so that a web browser executing on the computer **2400** can interact with the web server as a user interacts with a GUI that operates in the web browser.

As mentioned above, some embodiments include electronic components, such as microprocessors, storage and memory that store computer program instructions in a machine-readable or computer-readable medium (alternatively referred to as computer-readable storage media, machine-readable media, or machine-readable storage media). Some examples of such computer-readable media include RAM, ROM, read-only compact discs (CD-ROM), recordable compact discs (CD-R), rewritable compact discs (CD-RW), read-only digital versatile discs (e.g., DVD-ROM, dual-layer DVD-ROM), a variety of recordable/rewritable DVDs (e.g., DVD-RAM, DVD-RW, DVD+RW, etc.), flash memory (e.g., SD cards, mini-SD cards, micro-SD cards, etc.), magnetic and/or solid state hard drives, read-only and recordable blu-ray discs, ultra density optical discs, any other optical or magnetic media, and floppy disks. The computer-readable media may store a computer program that is executable by a device such as an electronics device, a microprocessor, a processor, a multi-processor (e.g., an IC with several processing units on it) and includes sets of instructions for performing various operations. The computer program excludes any wireless signals, wired download signals, and/or any other ephemeral signals.

Examples of hardware devices configured to store and execute sets of instructions include, but are not limited to, ASICs, FPGAs, programmable logic devices ("PLDs"), ROM, and RAM devices. Examples of computer programs or computer code include machine code, such as produced by a compiler, and files including higher-level code that are executed by a computer, an electronic component, or a microprocessor using an interpreter.

As used in this specification and any claims of this application, the terms "computer", "computer system", "server", "processor", and "memory" all refer to electronic or other technological devices. These terms exclude people or groups of people. For the purposes of this specification, the terms display or displaying mean displaying on an electronic device. As used in this specification and any claims of this application, the terms "computer readable medium", "computer readable media", "machine readable medium", and "machine readable media" are entirely restricted to non-transitory, tangible, physical objects that store information in a form that is readable by a computer. These terms exclude any wireless signals, wired download signals, and/or any other ephemeral signals.

It should be recognized by one of ordinary skill in the art that any or all of the components of computer system **2400** may be used in conjunction with the invention. Moreover, one of ordinary skill in the art will appreciate that any other system configuration may also be used in conjunction with the invention or components of the invention.

While the invention has been described with reference to numerous specific details, one of ordinary skill in the art will recognize that the invention can be embodied in other specific forms without departing from the spirit of the invention. Moreover, while the examples shown illustrate many individual modules as separate blocks, one of ordinary skill in the art would recognize that some embodiments may combine these modules into a single functional block or element. One of ordinary skill in the art would also recognize that some embodiments may divide a particular module into multiple modules. Furthermore, specific details (such as details shown in FIGS. **1-23**) are given as an example and it is possible to use different circuit implementations to achieve the same results without deviating from the teachings of the invention. The words "embodiment" and "embodiments" are used throughout this specification to refer to the embodiments of the current invention.

One of ordinary skill in the art would understand that the invention is not to be limited by the foregoing illustrative details, but rather is to be defined by the appended claims.

What is claimed is:

1. A battery-operated device comprising:

a battery;

an electronic circuitry configured to be powered by the battery; and

a converter configured to receive energy from any of a plurality of authorized chargers, and generate power from the energy for charging the battery using the power;

the battery-operated device configured to:

receive a charger identification from a charger;

determine whether the charger identification is in a list of charger identifications belonging to the plurality of authorized chargers;

in response to determining that the charger identification is in the list of charger identifications:

receive the energy from the charger;

generate, using the converter, the power from the energy received from the charger;

charge the battery using the power received from the converter; and

use the battery to power the electronic circuitry.

2. The battery-operated device of claim **1** further comprising:

a coil configured to receive the energy by induction from the charger.

3. The battery-operated device of claim **2** further comprising:

a memory;

wherein the battery-operated device is further configured to store the list of charger identifications in the memory.

4. The battery-operated device of claim **2** further configured to:

in response to determining that the charger identification is not in the list of charger identifications, prevent charging of the battery by the charger.

5. The battery-operated device of claim **2**, wherein the charger identification is one of a MAC ID, an IP address, a name, a serial number, a product name, or a manufacturer name.

6. The battery-operated device of claim **2**, wherein the charger identification indicates one or more capabilities of the charger.

7. The battery-operated device of claim **2** further comprising:

a capacitor, wherein the converter is configured to store the power in the capacitor.

8. The battery-operated device of claim **2** further configured to:

use a same channel for receiving, from the charger, both the energy and the charger identification.

9. The battery-operated device of claim **2** further configured to:

use a first channel for receiving the energy from the charger;

use a second channel for receiving the charger identification from the charger;

wherein the first channel is different than the second channel.

10. The battery-operated device of claim **1** further comprising:

an antenna configured to receive radio frequency (RF) energy from the charger for conversion to the power by the converter for charging the battery.

11. A method of charging a battery-operated device including a battery, an electronic circuitry configured to be powered by the battery, and a converter configured to receive energy from any of a plurality of authorized chargers, and generate power from the energy for charging the battery using the power, the method comprising:

receiving a charger identification from a charger;

determining whether the charger identification is in a list of charger identifications belonging to the plurality of authorized chargers;

in response to determining that the charger identification is in the list of charger identifications:

receiving the energy from the charger;

generating, using the converter, the power from the energy received from the charger;

charging the battery using the power received from the converter; and

using the battery to power the electronic circuitry.

12. The method of claim **11**, wherein the battery-operated device further includes a coil, and wherein the method further comprises:

receiving, using the coil, the energy by induction from the charger.

13. The method of claim **12**, wherein the battery-operated device further includes a memory having the list of charger identifications stored therein.

14. The method of claim **12** further comprising:

in response to determining that the charger identification is not in the list of charger identifications, preventing charging of the battery by the charger.

15. The method of claim **12**, wherein the charger identification is one of a MAC ID, an IP address, a name, a serial number, a product name, or a manufacturer name.

16. The method of claim **12**, wherein the charger identification indicates one or more capabilities of the charger.

17. The method of claim **12**, wherein the battery-operated device further includes a capacitor, and wherein the method further comprises:

storing, by the converter, the power in the capacitor.

18. The method of claim **12** further comprising:

using a same channel for receiving, from the charger, both the energy and the charger identification.

19. The method of claim **12** further comprising:

using a first channel for receiving the energy from the charger;

using a second channel for receiving the charger identification from the charger;

wherein the first channel is different than the second channel.

20. The method of claim **11**, wherein the battery-operated device further includes an antenna, and wherein the method further comprises:

receiving, using the antenna, radio frequency (RF) energy from the charger for conversion to the power by the converter for charging the battery.

* * * * *

IN THE UNITED STATES DISTRICT COURT
FOR THE DISTRICT OF DELAWARE

WAVERLY LICENSING LLC, Plaintiff, v. **GRANITE RIVER LABS INC.,** Defendant.	Case No. Patent Case Jury Trial Demanded

COMPLAINT FOR PATENT INFRINGEMENT

Plaintiff Waverly Licensing LLC ("Plaintiff"), through its attorneys, complains of Granite River Labs Inc. ("Defendant"), and alleges the following:

PARTIES

1. Plaintiff Waverly Licensing LLC is a limited liability company with its principal place of business at 3333 Preston Road STE 300 #1095, Frisco, TX 75034.
2. Upon information and belief, Defendant is a corporation organized under the laws of Delaware, having a principal place of business at 3500 Thomas Road Suite A, Santa Clara, CA 95054. Upon information and belief, Defendant may be served with process c/o The Corporation Trust Company, Corporation Trust Center, 1209 Orange Street, Wilmington, DE 19801.

JURISDICTION

3. This is an action for patent infringement arising under the patent laws of the United States, Title 35 of the United States Code.
4. This Court has exclusive subject matter jurisdiction under 28 U.S.C. §§ 1331 and 1338(a).

5. This Court has personal jurisdiction over Defendant because it has engaged in systematic and continuous business activities in this District. As described below, Defendant has committed acts of patent infringement giving rise to this action within this District.

VENUE

6. Venue is proper in this District under 28 U.S.C. § 1400(b) because Defendant has committed acts of patent infringement in this District and Defendant is incorporated in in this District. In addition, Plaintiff has suffered harm in this district.

PATENT-IN-SUIT

7. On March 2, 2021, the United States Patent and Trademark Office ("USPTO") duly and legally issued U.S. Patent No. 10,938,246 (the "'246 Patent"), entitled "METHOD AND APPARATUS FOR CHARGING A BATTERY – OPERATED DEVICE" after a full and fair examination. The '246 Patent is attached hereto as Exhibit 1 and incorporated herein as if fully rewritten.
8. Plaintiff is presently the owner of the '246 Patent, having received all right, title and interest in and to the '246 Patent from the previous assignee of record. Plaintiff possesses all rights of recovery under the '246 Patent, including the exclusive right to recover for past infringement.
9. To the extent required, Plaintiff has complied with all marking requirements under 35 U.S.C. § 287.

COUNT 1: INFRINGEMENT OF THE '246 PATENT

10. Plaintiff incorporates the above paragraphs herein by reference.
11. **Direct Infringement.** Defendant has directly infringed one or more claims of the '246 Patent in at least this District by making, using, offering to sell, selling and/or importing, without limitation, at least the Defendant products identified in the charts incorporated into this Count

below (among the "Exemplary Defendant Products") that infringe at least the exemplary claims of the '246 Patent also identified in the charts incorporated into this Count below (the "Exemplary '246 Patent Claims") literally or by the doctrine of equivalents. On information and belief, numerous other devices that infringe the claims of the '246 Patent have been made, used, sold, imported, and offered for sale by Defendant and/or its customers.

12. Defendants also have directly infringed, literally or under the doctrine of equivalents, the Exemplary '246 Patent Claims, by having its employees internally test and use these Exemplary Products.

13. Exhibit 2 includes charts comparing the Exemplary '246 Patent Claims to the Exemplary Defendant Products. As set forth in these charts, the Exemplary Defendant Products practice the technology claimed by the '246 Patent. Accordingly, the Exemplary Defendant Products incorporated in these charts satisfy all elements of the Exemplary '246 Patent Claims.

14. Plaintiff therefore incorporates by reference in its allegations herein the claim charts of Exhibit 2.

15. Plaintiff is entitled to recover damages adequate to compensate for Defendants' infringement.

JURY DEMAND

16. Under Rule 38(b) of the Federal Rules of Civil Procedure, Plaintiff respectfully requests a trial by jury on all issues so triable.

PRAYER FOR RELIEF

WHEREFORE, Plaintiff respectfully requests the following relief:

A. A judgment that the '246 Patent is valid and enforceable;

B. A judgment that Defendants have infringed, one or more claims of the '246 Patent;

C. An accounting of all damages not presented at trial;

D. A judgment that awards Plaintiff all appropriate damages under 35 U.S.C. § 284 for Defendants' infringement with respect to the '246 patent;

E. And, if necessary, to adequately compensate Plaintiff for Defendants' infringement, an accounting:

i. that this case be declared exceptional within the meaning of 35 U.S.C. § 285 and that Plaintiff be awarded its reasonable attorneys' fees against Defendants that it incurs in prosecuting this action;

ii. that Plaintiff be awarded costs, and expenses that it incurs in prosecuting this action; and

iii. that Plaintiff be awarded such further relief at law or in equity as the Court deems just and proper.

Dated: March 31, 2022

Respectfully submitted,

CHONG LAW FIRM PA

/s/Jimmy Chong

Jimmy Chong (#4839)
2961 Centerville Road, Suite 350
Wilmington, DE 19808
Telephone: (302) 999-9480
Facsimile: (302) 800-1999
Email: chong@chonglawfirm.com

Counsel for Plaintiff
Waverly Licensing LLC

EXHIBIT 2

US10938246B2	GRL USB-PD Performance Analyzer ("The accused product")
11. A method of charging a battery-operated device including a battery, an electronic circuitry configured to be powered by the battery, and a converter configured to receive energy from any of a plurality of authorized chargers, and generate power from the energy for charging the battery using the power, the method comprising:	The accused product utilizes device (e.g., smartphone, laptop, etc.) which practices the method of charging a battery-operated device (e.g., smartphone, laptop, etc.) including a battery (e.g., battery of the smartphone), an electronic circuitry (e.g., circuitry for camera, display, etc.) configured to be powered by the battery, and a converter (e.g., converting power from USB to battery charging) configured to receive energy (e.g., power from USB) configured to receive energy from any of a plurality of authorized chargers (e.g., a plurality of chargers compliant with USB PD 2.0 and USB PD 3.0 standards), and generate power from the energy for charging the battery (e.g., battery of the smartphone) using the power.  https://www.graniteriverlabs.com/en-us/test-solutions/protocol-power-test-solutions/grl-usb-pd-a1

EXHIBIT 2

	Overview & Features **Overview** • Supports all USB Type-C® Power Delivery Performance Analy based charging like USB Power Delivery 3.0 and 2.0, Qualcomm Quick Charge™ 2.0/3.0/4/4+, Huawei SuperCharge, Samsung Adaptive Fast Charge, etc. • Also supports all charging technologies over USB micro-B, USB Type-A and Apple Lightning connectors through inexpensive USB Type-C adapters • Easily assess power charging performance and entry into Thunderbolt™, DisplayPort™, and other Alt-Modes • Conveniently view power, voltage, current, and USB PD protocol all on the same graph • Able to process poor USB power delivery protocol packets without crashing https://www.graniteriverlabs.com/en-us/test-solutions/protocol-power-test-solutions/grl-usb-pd-a1

EXHIBIT 2

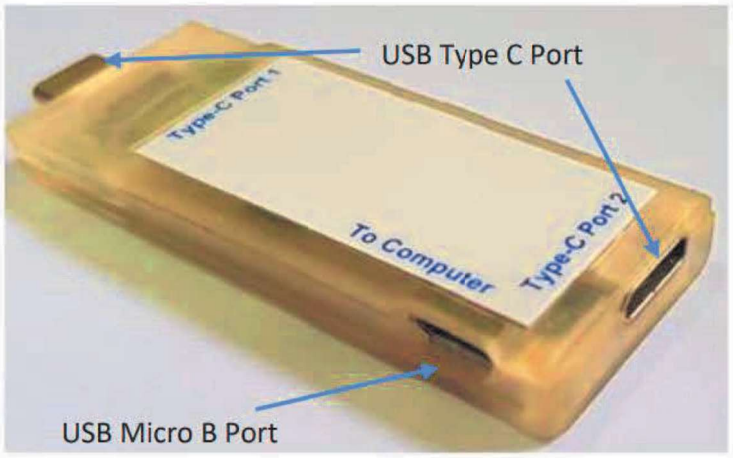

5.1 USB Type-C ™ Plug connector

To connect a USB Type-C ™ device that performs PD protocol analysis.

5.2 USB Type-C ™ Receptacle connector

To connect a USB Type-C ™ device that performs PD protocol analysis.

5.3 USB Micro-B connector

To connect the control PC for GRL-USB-PD-A1 Analyzer viewer.

Source: User Manual for GRL USB Type C Power Delivery

EXHIBIT 2

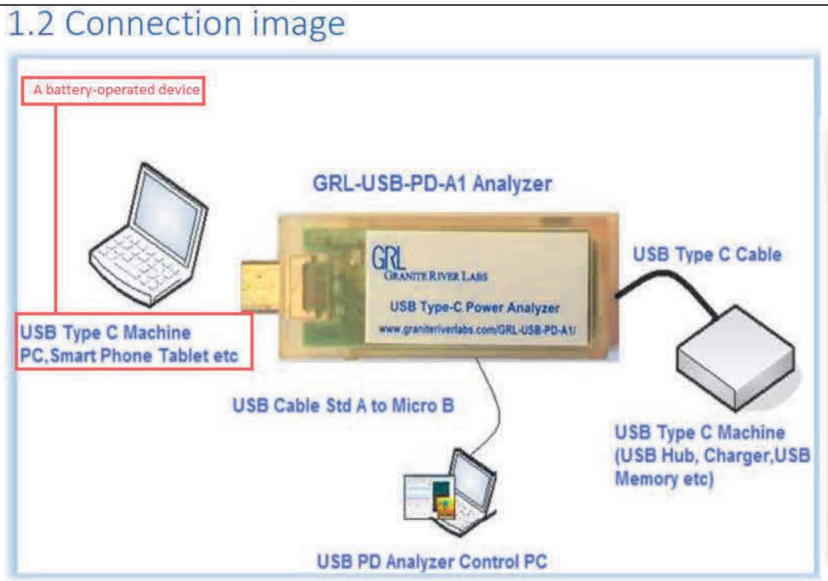



Source: User Manual for GRL USB Type C Power Delivery

EXHIBIT 2

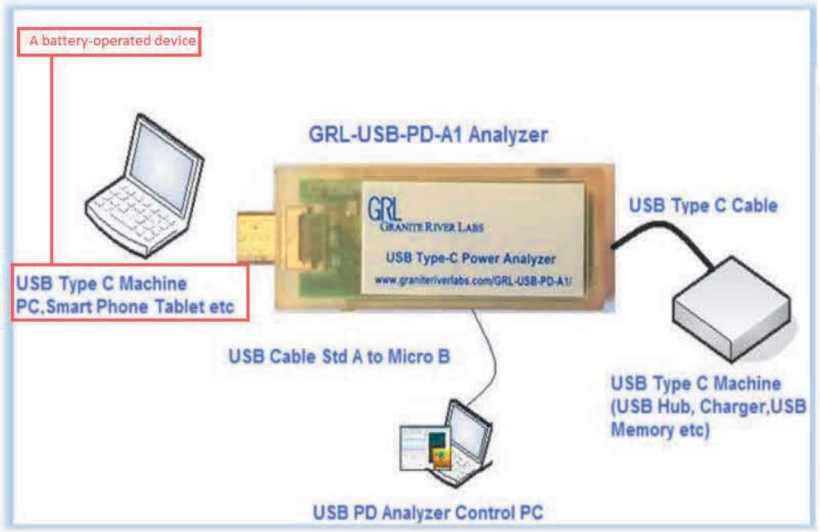



Source: User Manual for GRL USB Type C Power Delivery

EXHIBIT 2

	What's Inside My Smartphone? — An In-Depth Look At Different Components Of A Smartphone Fossbytes Staff June 24, 2017 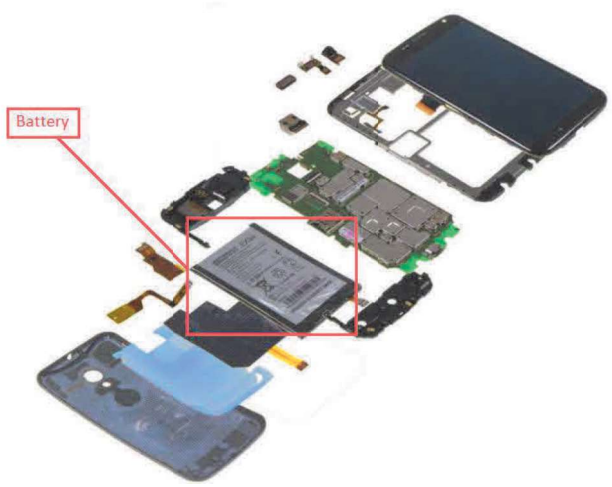 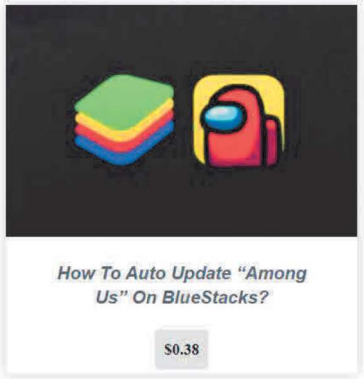 https://fossbytes.com/whats-inside-smartphone-depth-look-parts-powering-everyday-gadget/

EXHIBIT 2

2. Battery



https://fossbytes.com/whats-inside-smartphone-depth-look-parts-powering-everyday-gadget/

A smartphone comprises circuitries for camera, display system, etc. which are powered by the battery of the smartphone.

EXHIBIT 2

	What's Inside My Smartphone? — An In-Depth Look At Different Components Of A Smartphone Fossbytes Staff June 24, 2017 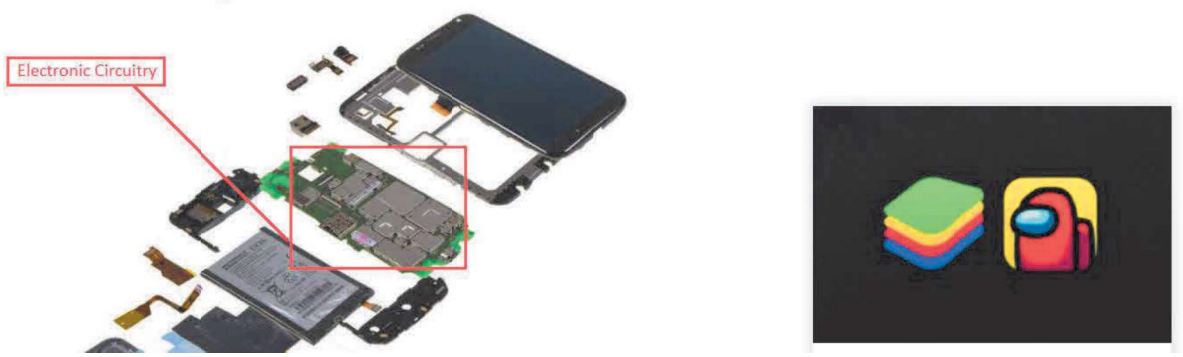 https://fossbytes.com/whats-inside-smartphone-depth-look-parts-powering-everyday-gadget/

EXHIBIT 2

	3. 'System-on-a-chip' or SoC 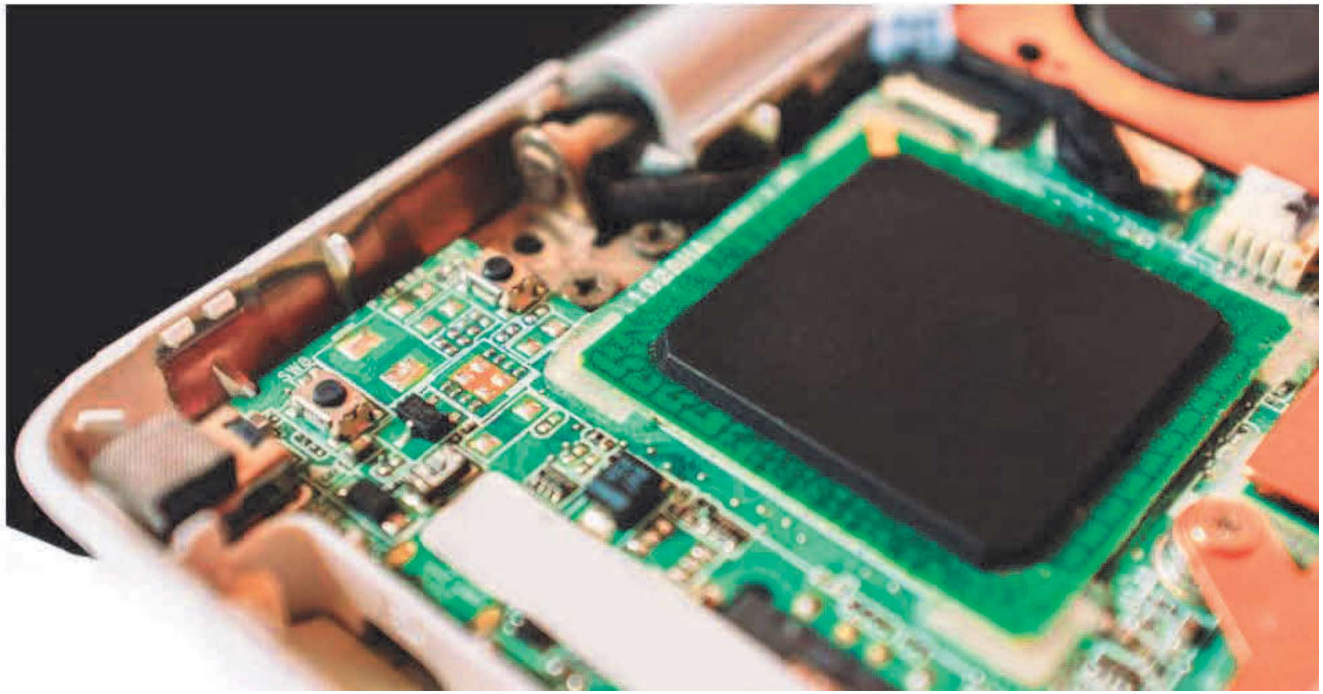 https://fossbytes.com/whats-inside-smartphone-depth-look-parts-powering-everyday-gadget/ The accused product tests USB PD 3.0 charging. It utilizes a smartphone and charger compliant with USB PD 3.0 charging standard. The USB PD 3.0 standard provides the same output power support as the USB PD 2.0 and in addition provides programmable power supply (PPS) and is backward compatible with USB PD 2.0 for charging the battery.

EXHIBIT 2

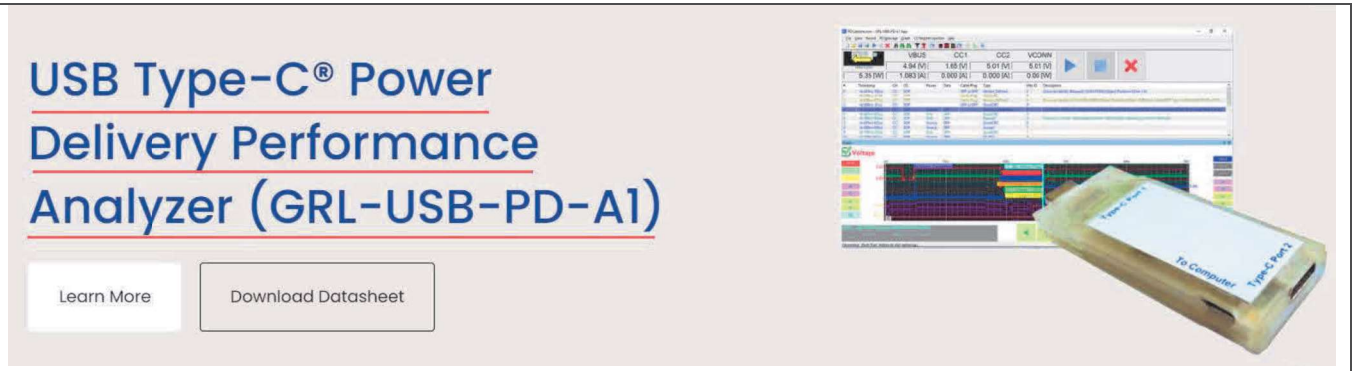

https://www.graniteriverlabs.com/en-us/test-solutions/protocol-power-test-solutions/grl-usb-pd-a1

Overview & Features

Overview

- Supports all USB Type-C® Power Delivery Performance Analy based charging like USB Power Delivery 3.0 and 2.0, Qualcomm Quick Charge™ 2.0/3.0/4/4+, Huawei SuperCharge, Samsung Adaptive Fast Charge, etc.
- Also supports all charging technologies over USB micro-B, USB Type-A and Apple Lightning connectors through inexpensive USB Type-C adapters
- Easily assess power charging performance and entry into Thunderbolt™, DisplayPort™, and other Alt-Modes
- Conveniently view power, voltage, current, and USB PD protocol all on the same graph
- Able to process poor USB power delivery protocol packets without crashing

https://www.graniteriverlabs.com/en-us/test-solutions/protocol-power-test-solutions/grl-usb-pd-a1

EXHIBIT 2

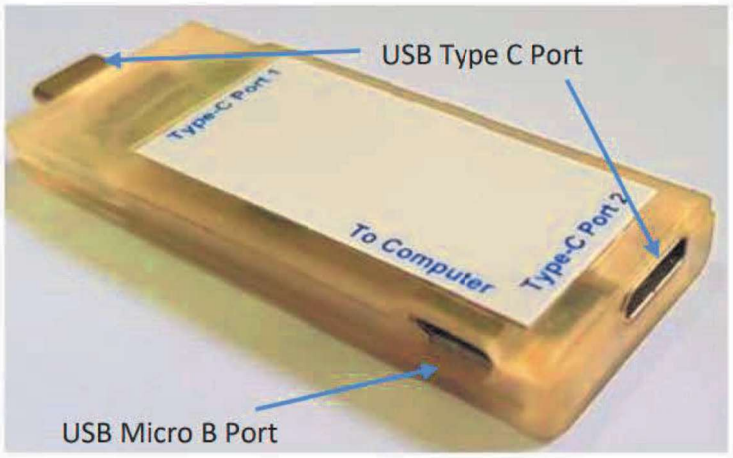

5.1 USB Type-C ™ Plug connector

To connect a USB Type-C ™ device that performs PD protocol analysis.

5.2 USB Type-C ™ Receptacle connector

To connect a USB Type-C ™ device that performs PD protocol analysis.

5.3 USB Micro-B connector

To connect the control PC for GRL-USB-PD-A1 Analyzer viewer.

Source: User Manual for GRL USB Type C Power Delivery

EXHIBIT 2

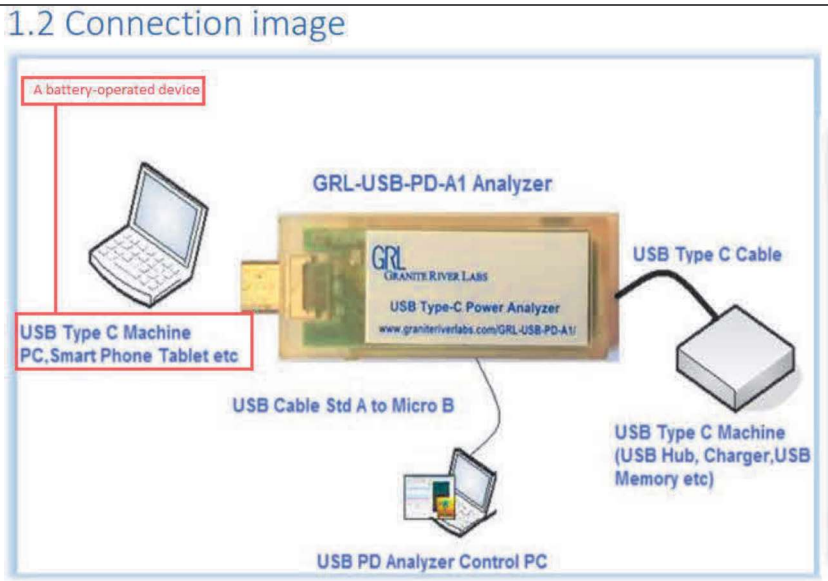



Source: User Manual for GRL USB Type C Power Delivery

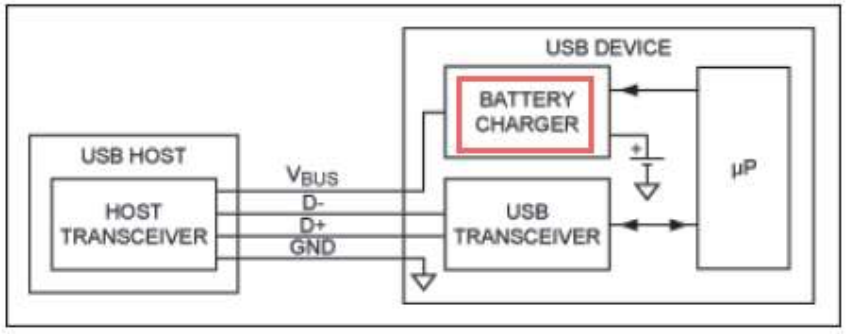

https://www.electronicproducts.com/the-basics-of-usb-battery-charging-a-survival-guide/#

EXHIBIT 2

	2.3 Compatibility with Revision 2.0 Revision 3.0 of the USB Power Delivery specification is designed to be fully interoperable with *[USBPD 2.0]* systems using BMC signaling over the *[USB Type-C 2.0]* connector and to be compatible with Revision 2.0 hardware. This specification mandates that all Revision 3.0 systems fully support Revision 2.0 operation. They must discover the supported Revision used by their Port Partner and any connected Cable Plugs and revert to operation using the lowest common Revision number (see Section 6.2.1.1.5). This specification defines Extended Messages containing data of up to 260 bytes (see Section 6.2.1.2). These Messages will be larger than expected by existing PHY HW. To accommodate Revision 2.0 based systems a Chunking mechanism is mandated such that Messages are limited to Revision 2.0 sizes unless it is discovered that both systems support the longer Message lengths. *Source: USB PD 3.0 specification.PDF* The accused product receives energy from a charger (e.g., an authorized charger complying with USB PD 2.0 or USB PD 3.0) which provides messages according to USB PD standards to indicate its charging capabilities and specification revision value. After selection of the common specification revision level and negotiation of power requirements, it generates power for charging the battery from the received energy.

EXHIBIT 2

	6.2.1.1.5 Specification Revision The ***Specification Revision*** field ***Shall*** be one of the following values (except 11b): • 00b –Revision 1.0 • 01b –Revision 2.0 • 10b – Revision 3.0 • 11b – ***Reserved***, ***Shall Not*** be used To ensure interoperability with existing USBPD Products, USBPD Products ***Shall*** support every PD Specification Revision starting from ***[USBPD 2.0]*** for ***SOP****; the only exception to this is a VPD which ***Shall Ignore*** Messages sent with PD Specification Revision 2.0 and earlier. After a physical or logical (USB Type-C® Error Recovery) Attach, a Port discovers the common Specification Revision level between itself and its Port Partner and/or the Cable Plug(s), and uses this Specification Revision level until a Detach, Hard Reset or Error Recovery happens. After detection of the Specification Revision to be used, all PD communications ***Shall*** comply completely with the relevant revision of the PD specification. An Attach event or a Hard Reset ***Shall*** cause the detection of the applicable Specification Revision to be performed for both Ports and Cable Plugs according to the rules stated below: When the Source Port first communicates with the Sink Port the ***Specification Revision*** field ***Shall*** be used as described by the following steps: 1. The Source Port sends a ***Source_Capabilities*** Message to the Sink Port setting the ***Specification Revision*** field to the highest Revision of the Power Delivery Specification the Source Port supports. 2. The Sink Port responds with a ***Request*** Message setting the ***Specification Revision*** field to the highest Revision of the Power Delivery Specification the Sink Port supports that is equal to or lower than the ***Specification Revision*** received from the Source Port. 3. The Source and Sink Ports ***Shall*** use the ***Specification Revision*** in the ***Request*** Message from the Sink in step 2 in all subsequent communications until a Detach, Hard Reset, or Error Recovery happens.

EXHIBIT 2

Table 6-1 Message Header

Bit(s)	Start of Packet	Field Name	Reference
15	SOP*	*Extended*	Section 6.2.1.1.1
14...12	SOP*	*Number of Data Objects*	Section 6.2.1.1.2
11...9	SOP*	*MessageID*	Section 6.2.1.1.3
8	SOP only	*Port Power Role*	Section 6.2.1.1.4
	SOP'/SOP''	*Cable Plug*	Section 6.2.1.1.7
7...6	SOP*	*Specification Revision*	Section 6.2.1.1.5
5	SOP only	*Port Data Role*	Section 6.2.1.1.6
	SOP'/SOP''	***Reserved***	Section 1.4.2.10
4...0	SOP*	*Message Type*	Section 6.2.1.1.8

2.6.2 Sink Operation

- At Attach (no PD Connection or Contract):
  - Sink detects Source Attachment through the presence of *vSafe5V*.
  - For a DRP that toggles the Port becomes a Sink Port on Attachment of a Source.
  - Once the Sink detects the presence of *vSafe5V* on V_{BUS} it waits for a *Source_Capabilities* Message indicating the presence of a PD capable Source.
  - If the Sink does not receive a *Source_Capabilities* Message within *tTypeCSinkWaitCap* then it issues *Hard Reset* Signaling in order to cause the Source Port to send a *Source_Capabilities* Message if the Source Port is PD capable.
  - The Sink does not generate SOP' or SOP'' Packets, is not required to detect SOP' or SOP'' Packets and does not recognize them.
- Establishing PD Connection (no PD Connection or Contract):
  - The Sink receives a *Source_Capabilities* Message and responds with a *GoodCRC* Message.
  - The Sink does not generate SOP' or SOP'' Packets, is not required to detect SOP' or SOP'' Packets and ***Discards*** them.

EXHIBIT 2

	6.4.1.2 Source_Capabilities Message A Source Port ***Shall*** report its capabilities in a series of 32-bit Power Data Objects (see Table 6-7) as part of a ***Source_Capabilities*** Message (see Figure 6-12). Power Data Objects are used to convey a Source Port's capabilities to provide power including Dual-Role Power ports presently operating as a Sink. Each Power Data Object ***Shall*** describe a specific Source capability such as a Battery (e.g. 2.8-4.1V) or a fixed power supply (e.g. 12V) at a maximum allowable current. The ***Number of Data Objects*** field in the Message Header ***Shall*** define the number of Power Data Objects that follow the Message Header in a Data Message. All Sources ***Shall*** minimally offer one Power Data Object that reports ***vSafe5V***. A Source ***Shall Not*** offer multiple Power Data Objects of the same type (fixed, variable, Battery) and the same voltage but ***Shall*** instead offer one Power Data Object with the highest available current for that Source capability and voltage. Sinks with Accessory Support do not source V_{BUS} (see ***[USB Type-C 2.0]***). Sinks with Accessory Support are still considered Sources when sourcing V_{CONN} to an Accessory even though V_{BUS} is not applied; in this case they ***Shall*** advertise ***vSafe5V*** with the Maximum Current set to 0mA in the first Power Data Object. The main purpose of this is to enable the Sink with Accessory Support to get into the ***PE_SRC_Ready*** State in order to enter an Alternate Mode. A Sink ***Shall*** evaluate every ***Source_Capabilities*** Message it receives and ***Shall*** respond with a ***Request*** Message. If its power consumption exceeds the Source's capabilities it ***Shall*** re-negotiate so as not to exceed the Source's most recently advertised capabilities. A Sink that evaluates the ***Source_Capabilities*** Message it receives and identifies a PPS APDO ***Shall*** periodically re-request the PPS APDO at least every ***tPPSRequest*** until either:

EXHIBIT 2

6.4.1 Capabilities Message

A Capabilities Message (*Source_Capabilities* Message or *Sink_Capabilities* Message) ***Shall*** have at least one Power Data Object for *vSafe5V*. The Capabilities Message ***Shall*** also contain the sending Port's information followed by up to 6 additional Power Data Objects. Power Data Objects in a Capabilities Message ***Shall*** be sent in the following order:

1. The *vSafe5V* Fixed Supply Object ***Shall*** always be the first object.
2. The remaining Fixed Supply Objects, if present, ***Shall*** be sent in voltage order; lowest to highest.
3. The Battery Supply Objects, if present ***Shall*** be sent in Minimum Voltage order; lowest to highest.
4. The Variable Supply (non-Battery) Objects, if present, ***Shall*** be sent in Minimum Voltage order; lowest to highest.
5. The Programmable Power Supply Objects, if present, ***Shall*** be sent in Maximum Voltage order, lowest to highest.

Figure 6-12 Example Capabilities Message with 2 Power Data Objects

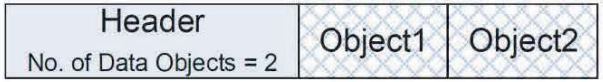

In Figure 6-12, the *Number of Data Objects* field is 2: *vSafe5V* plus one other voltage.

Power Data Objects (PDO) and Augmented Power Data Objects (APDO) are identified by the Message Header's Type field. They are used to form *Source_Capabilities* Messages and *Sink_Capabilities* Messages.

EXHIBIT 2

<table>
<tr>
<td></td>
<td>
Sources expose their power capabilities by sending a Source_Capabilities Message. Sinks expose their power requirements by sending a Sink_Capabilities Message. Both are composed of a number of 32-bit Power Data Objects (see Table 6-7).

Table 6-7 Power Data Object
<table>
<tr><th>Bit(s)</th><th colspan="2">Description</th></tr>
<tr><td>B31...30</td><td>Value</td><td>Parameter</td></tr>
<tr><td></td><td>00b</td><td>Fixed supply (Vmin = Vmax)</td></tr>
<tr><td></td><td>01b</td><td>Battery</td></tr>
<tr><td></td><td>10b</td><td>Variable Supply (non-Battery)</td></tr>
<tr><td></td><td>11b</td><td>Augmented Power Data Object (APDO)</td></tr>
<tr><td>B29...0</td><td colspan="2">Specific Power Capabilities are described by the PDOs in the following sections.</td></tr>
</table>
The Augmented Power Data Object (APDO) is defined to allow support for more than the four PDO types by extending the Power Data Object field from 2 to 4 bits when the B31...B30 are 11b. The generic APDO structure is shown in Table 6-8.

Table 6-8 Augmented Power Data Object
<table>
<tr><th>Bit(s)</th><th>Description</th></tr>
<tr><td>B31...30</td><td>11b – Augmented Power Datat Object (APDO)</td></tr>
<tr><td>B29...28</td><td>00b – Programmable Power Supply
01b-11b - Reserved</td></tr>
<tr><td>B27...0</td><td>Specific Power Capabilities are described by the APDOs in the following sections.</td></tr>
</table>

Source: USB PD 3.0 specification.PDF
</td>
</tr>
<tr>
<td>receiving a charger identification from a charger;

Excerpt from US’246 [13:5-15]:
C. Power Transfer only from Authorized Masters</td>
<td>The accused product utilizes a device (e.g., smartphone, etc.) which receives a charger identification (e.g., information related to capabilities of a charger as well as specification revision value supported by the charger as indicated in the Source_Capabilities Message) from a charger.</td>
</tr>
</table>

EXHIBIT 2

A slave prevents non-authorized masters from trying to charge it or power it up (or networked servers from commanding masters to charge it or power it up) in some embodiments. Slaves store ***identifying information about masters (or networked servers) that are authorized to charge them. The stored information about authorized masters or networked servers includes one or more of the following*** *information about the masters: the masters' media access control address (MAC ID), network IP address, name, serial number, product name and manufacturer,* ***capabilities****, etc.*	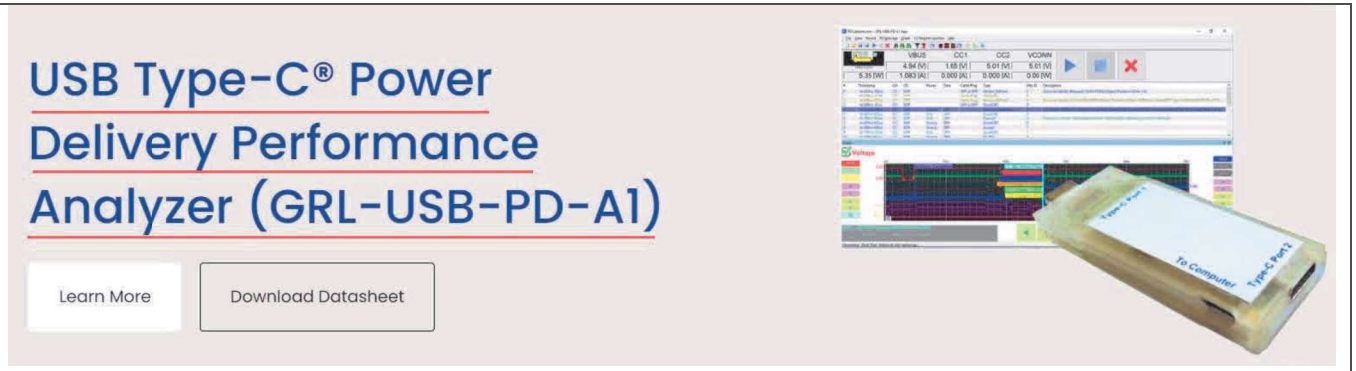 https://www.graniteriverlabs.com/en-us/test-solutions/protocol-power-test-solutions/grl-usb-pd-a1 Overview & Features Overview • Supports all USB Type-C® Power Delivery Performance Analy based charging like USB Power Delivery 3.0 and 2.0, Qualcomm Quick Charge™ 2.0/3.0/4/4+, Huawei SuperCharge, Samsung Adaptive Fast Charge, etc. • Also supports all charging technologies over USB micro-B, USB Type-A and Apple Lightning connectors through inexpensive USB Type-C adapters • Easily assess power charging performance and entry into Thunderbolt™, DisplayPort™, and other Alt-Modes • Conveniently view power, voltage, current, and USB PD protocol all on the same graph • Able to process poor USB power delivery protocol packets without crashing https://www.graniteriverlabs.com/en-us/test-solutions/protocol-power-test-solutions/grl-usb-pd-a1

EXHIBIT 2

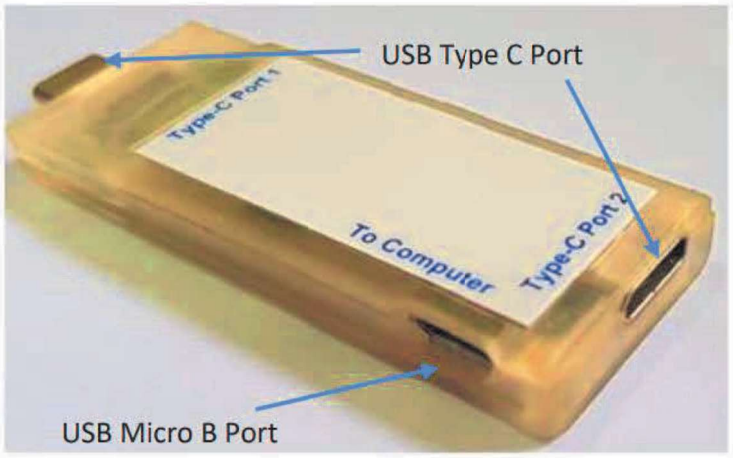

5.1 USB Type-C ™ Plug connector

To connect a USB Type-C ™ device that performs PD protocol analysis.

5.2 USB Type-C ™ Receptacle connector

To connect a USB Type-C ™ device that performs PD protocol analysis.

5.3 USB Micro-B connector

To connect the control PC for GRL-USB-PD-A1 Analyzer viewer.

Source: User Manual for GRL USB Type C Power Delivery

EXHIBIT 2

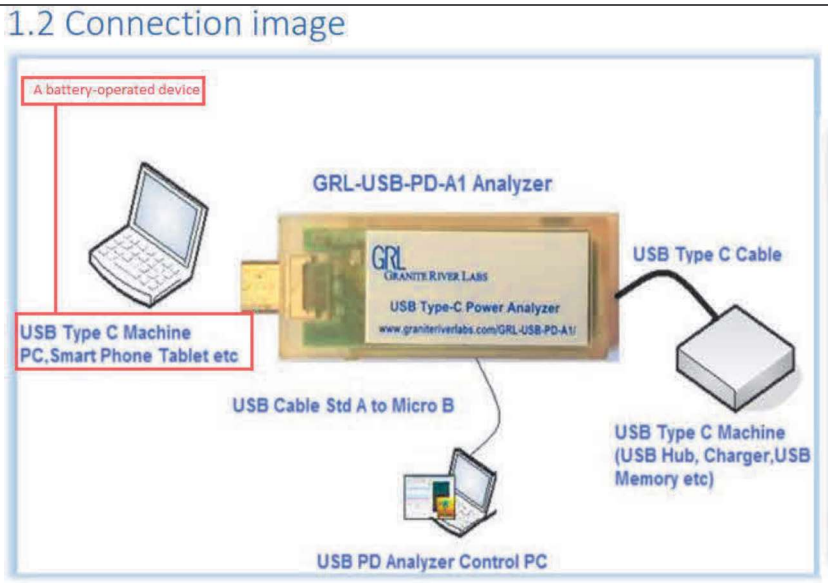



Source: User Manual for GRL USB Type C Power Delivery

The accused product receives energy from a charger (e.g., an authorized charger complying with USB PD 2.0 or USB PD 3.0) which provides messages according to USB PD standards to indicate its charging capabilities and specification revision value. After selection of the common specification revision level and negotiation of power requirements, it generates power for charging the battery from the received energy.

EXHIBIT 2

An Attach event or a Hard Reset ***Shall*** cause the detection of the applicable Specification Revision to be performed for both Ports and Cable Plugs according to the rules stated below:

When the Source Port first communicates with the Sink Port the ***Specification Revision*** field ***Shall*** be used as described by the following steps:

1. The Source Port sends a ***Source_Capabilities*** Message to the Sink Port setting the ***Specification Revision*** field to the highest Revision of the Power Delivery Specification the Source Port supports.
2. The Sink Port responds with a ***Request*** Message setting the ***Specification Revision*** field to the highest Revision of the Power Delivery Specification the Sink Port supports that is equal to or lower than the ***Specification Revision*** received from the Source Port.
3. The Source and Sink Ports ***Shall*** use the ***Specification Revision*** in the ***Request*** Message from the Sink in step 2 in all subsequent communications until a Detach, Hard Reset, or Error Recovery happens.

Table 6-1 Message Header

Bit(s)	Start of Packet	Field Name	Reference
15	SOP*	*Extended*	Section 6.2.1.1.1
14...12	SOP*	*Number of Data Objects*	Section 6.2.1.1.2
11...9	SOP*	*MessageID*	Section 6.2.1.1.3
8	SOP only	*Port Power Role*	Section 6.2.1.1.4
	SOP'/SOP''	*Cable Plug*	Section 6.2.1.1.7
7...6	SOP*	*Specification Revision*	Section 6.2.1.1.5
5	SOP only	*Port Data Role*	Section 6.2.1.1.6
	SOP'/SOP''	***Reserved***	Section 1.4.2.10
4...0	SOP*	*Message Type*	Section 6.2.1.1.8

EXHIBIT 2

	2.6.2 Sink Operation
	• At Attach (no PD Connection or Contract):
	  ○ Sink detects Source Attachment through the presence of *vSafe5V*.
	  ○ For a DRP that toggles the Port becomes a Sink Port on Attachment of a Source.
	  ○ Once the Sink detects the presence of *vSafe5V* on V_{BUS} it waits for a *Source_Capabilities* Message indicating the presence of a PD capable Source.
	  ○ If the Sink does not receive a *Source_Capabilities* Message within *tTypeCSinkWaitCap* then it issues *Hard Reset* Signaling in order to cause the Source Port to send a *Source_Capabilities* Message if the Source Port is PD capable.
	  ○ The Sink does not generate SOP' or SOP'' Packets, is not required to detect SOP' or SOP'' Packets and does not recognize them.
	• Establishing PD Connection (no PD Connection or Contract):
	  ○ The Sink receives a *Source_Capabilities* Message and responds with a *GoodCRC* Message.
	  ○ The Sink does not generate SOP' or SOP'' Packets, is not required to detect SOP' or SOP'' Packets and ***Discards*** them.

EXHIBIT 2

6.4.1.2 Source_Capabilities Message

A Source Port ***Shall*** report its capabilities in a series of 32-bit Power Data Objects (see Table 6-7) as part of a ***Source_Capabilities*** Message (see Figure 6-12). Power Data Objects are used to convey a Source Port's capabilities to provide power including Dual-Role Power ports presently operating as a Sink.

Each Power Data Object ***Shall*** describe a specific Source capability such as a Battery (e.g. 2.8-4.1V) or a fixed power supply (e.g. 12V) at a maximum allowable current. The ***Number of Data Objects*** field in the Message Header ***Shall*** define the number of Power Data Objects that follow the Message Header in a Data Message. All Sources ***Shall*** minimally offer one Power Data Object that reports ***vSafe5V***. A Source ***Shall Not*** offer multiple Power Data Objects of the same type (fixed, variable, Battery) and the same voltage but ***Shall*** instead offer one Power Data Object with the highest available current for that Source capability and voltage.

Sinks with Accessory Support do not source V_{BUS} (see ***[USB Type-C 2.0]***). Sinks with Accessory Support are still considered Sources when sourcing V_{CONN} to an Accessory even though V_{BUS} is not applied; in this case they ***Shall*** advertise ***vSafe5V*** with the Maximum Current set to 0mA in the first Power Data Object. The main purpose of this is to enable the Sink with Accessory Support to get into the ***PE_SRC_Ready*** State in order to enter an Alternate Mode.

A Sink ***Shall*** evaluate every ***Source_Capabilities*** Message it receives and ***Shall*** respond with a ***Request*** Message. If its power consumption exceeds the Source's capabilities it ***Shall*** re-negotiate so as not to exceed the Source's most recently advertised capabilities.

A Sink that evaluates the ***Source_Capabilities*** Message it receives and identifies a PPS APDO ***Shall*** periodically re-request the PPS APDO at least every ***tPPSRequest*** until either:

EXHIBIT 2

6.4.1 Capabilities Message

A Capabilities Message (*Source_Capabilities* Message or *Sink_Capabilities* Message) ***Shall*** have at least one Power Data Object for *vSafe5V*. The Capabilities Message ***Shall*** also contain the sending Port's information followed by up to 6 additional Power Data Objects. Power Data Objects in a Capabilities Message ***Shall*** be sent in the following order:

1. The *vSafe5V* Fixed Supply Object ***Shall*** always be the first object.
2. The remaining Fixed Supply Objects, if present, ***Shall*** be sent in voltage order; lowest to highest.
3. The Battery Supply Objects, if present ***Shall*** be sent in Minimum Voltage order; lowest to highest.
4. The Variable Supply (non-Battery) Objects, if present, ***Shall*** be sent in Minimum Voltage order; lowest to highest.
5. The Programmable Power Supply Objects, if present, ***Shall*** be sent in Maximum Voltage order, lowest to highest.

Figure 6-12 Example Capabilities Message with 2 Power Data Objects

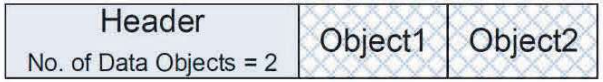

In Figure 6-12, the *Number of Data Objects* field is 2: *vSafe5V* plus one other voltage.

Power Data Objects (PDO) and Augmented Power Data Objects (APDO) are identified by the Message Header's Type field. They are used to form *Source_Capabilities* Messages and *Sink_Capabilities* Messages.

EXHIBIT 2

<table>
<tr>
<td></td>
<td>
Sources expose their power capabilities by sending a Source_Capabilities Message. Sinks expose their power requirements by sending a Sink_Capabilities Message. Both are composed of a number of 32-bit Power Data Objects (see Table 6-7).

Table 6-7 Power Data Object
<table>
<tr><th>Bit(s)</th><th colspan="2">Description</th></tr>
<tr><td>B31...30</td><td>Value</td><td>Parameter</td></tr>
<tr><td></td><td>00b</td><td>Fixed supply (Vmin = Vmax)</td></tr>
<tr><td></td><td>01b</td><td>Battery</td></tr>
<tr><td></td><td>10b</td><td>Variable Supply (non-Battery)</td></tr>
<tr><td></td><td>11b</td><td>Augmented Power Data Object (APDO)</td></tr>
<tr><td>B29...0</td><td colspan="2">Specific Power Capabilities are described by the PDOs in the following sections.</td></tr>
</table>
The Augmented Power Data Object (APDO) is defined to allow support for more than the four PDO types by extending the Power Data Object field from 2 to 4 bits when the B31...B30 are 11b. The generic APDO structure is shown in Table 6-8.

Table 6-8 Augmented Power Data Object
<table>
<tr><th>Bit(s)</th><th>Description</th></tr>
<tr><td>B31...30</td><td>11b – Augmented Power Datat Object (APDO)</td></tr>
<tr><td>B29...28</td><td>00b – Programmable Power Supply
01b-11b - Reserved</td></tr>
<tr><td>B27...0</td><td>Specific Power Capabilities are described by the APDOs in the following sections.</td></tr>
</table>

Source: USB PD 3.0 specification.PDF
</td>
</tr>
<tr>
<td>determining whether the charger identification is in a list of charger identifications belonging to the plurality of authorized chargers;</td>
<td>The accused product utilizes a device which determines whether the charger identification (e.g., specification revision value and capabilities of the charger as indicated in the Source_Capabilities message) is in a list of charger identifications belonging to the plurality of authorized chargers (e.g., specification revision values and source capabilities supported by the smartphone).</td>
</tr>
</table>

EXHIBIT 2

An Attach event or a Hard Reset ***Shall*** cause the detection of the applicable Specification Revision to be performed for both Ports and Cable Plugs according to the rules stated below:

When the Source Port first communicates with the Sink Port the ***Specification Revision*** field ***Shall*** be used as described by the following steps:

1. The Source Port sends a ***Source_Capabilities*** Message to the Sink Port setting the ***Specification Revision*** field to the highest Revision of the Power Delivery Specification the Source Port supports.
2. The Sink Port responds with a ***Request*** Message setting the ***Specification Revision*** field to the highest Revision of the Power Delivery Specification the Sink Port supports that is equal to or lower than the ***Specification Revision*** received from the Source Port.
3. The Source and Sink Ports ***Shall*** use the ***Specification Revision*** in the ***Request*** Message from the Sink in step 2 in all subsequent communications until a Detach, Hard Reset, or Error Recovery happens.

6.2.1.1.5 Specification Revision

The ***Specification Revision*** field ***Shall*** be one of the following values (except 11b):

- 00b –Revision 1.0
- 01b –Revision 2.0
- 10b – Revision 3.0
- 11b – ***Reserved***, ***Shall Not*** be used

To ensure interoperability with existing USBPD Products, USBPD Products ***Shall*** support every PD Specification Revision starting from ***[USBPD 2.0]*** for ***SOP****; the only exception to this is a VPD which ***Shall Ignore*** Messages sent with PD Specification Revision 2.0 and earlier.

EXHIBIT 2

	6.4.1.3 Sink Capabilities Message A Sink Port ***Shall*** report power levels it is able to operate at in a series of 32-bit Power Data Objects (see Table 6-7). These are returned as part of a ***Sink_Capabilities*** Message in response to a ***Get_Sink_Cap*** Message (see Figure 6-12). This is similar to that used for Source Port capabilities with equivalent Power Data Objects for Fixed, Variable and Battery Supplies as defined in this section. Power Data Objects are used to convey the Sink Port's operational power requirements including Dual-Role Power Ports presently operating as a Source. Each Power Data Object ***Shall*** describe a specific Sink operational power level, such as a Battery (e.g. 2.8-4.1V) or a fixed power supply (e.g. 12V). The ***Number of Data Objects*** field in the Message Header ***Shall*** define the number of Power Data Objects that follow the Message Header in a Data Message. All Sinks ***Shall*** minimally offer one Power Data Object with a power level at which the Sink can operate. A Sink ***Shall Not*** offer multiple Power Data Objects of the same type (fixed, variable, Battery) and the same voltage but ***Shall*** instead offer one Power Data Object with the highest available current for that Sink capability and voltage. All Sinks ***Shall*** include one Power Data Object that reports ***vSafe5V*** even if they require additional power to operate fully. In the case where additional power is required for full operation the Higher Capability bit ***Shall*** be set.

EXHIBIT 2

2.6.2 Sink Operation

- At Attach (no PD Connection or Contract):
  - Sink detects Source Attachment through the presence of ***vSafe5V***.
  - For a DRP that toggles the Port becomes a Sink Port on Attachment of a Source.
  - Once the Sink detects the presence of ***vSafe5V*** on V_{BUS} it waits for a ***Source_Capabilities*** Message indicating the presence of a PD capable Source.
  - If the Sink does not receive a ***Source_Capabilities*** Message within ***tTypeCSinkWaitCap*** then it issues ***Hard Reset*** Signaling in order to cause the Source Port to send a ***Source_Capabilities*** Message if the Source Port is PD capable.
  - The Sink does not generate SOP' or SOP'' Packets, is not required to detect SOP' or SOP'' Packets and does not recognize them.
- Establishing PD Connection (no PD Connection or Contract):
  - The Sink receives a ***Source_Capabilities*** Message and responds with a ***GoodCRC*** Message.
  - The Sink does not generate SOP' or SOP'' Packets, is not required to detect SOP' or SOP'' Packets and ***Discards*** them.
- Establishing Explicit Contract (PD Connection but no Explicit Contract or Implicit Contract after a Power Role Swap or Fast Role Swap):
  - The Sink receives a ***Source_Capabilities*** Message from the Source and responds with a ***Request*** Message. If this is a ***Valid*** request the Sink receives an ***Accept*** Message followed by a ***PS_RDY*** Message when the Source's power supply is ready to source power at the agreed level. At this point the Source and Sink have entered into an Explicit Contract:
    - The Sink Port may request one of the capabilities offered by the Source, even if this is the ***vSafe5V*** output offered by ***[USB 2.0]***, ***[USB 3.2]***, ***[USB Type-C 2.0]*** or ***[USBBC 1.2]***, in order to enable future power negotiation:
      - A Sink not requesting any capability with a ***Request*** Message results in an error.
    - A Sink unable to fully operate at the offered capabilities requests the default capability but indicates that it would prefer another power level and provide a physical indication of the failure to the end user (e.g. using an LED).
    - A Sink does not generate SOP' or SOP'' Packets, is not required to detect SOP' or SOP'' Packets and ***Discards*** them.

Source: USB PD 3.0 specification.PDF

EXHIBIT 2

	The accused product receives energy from a charger (e.g., an authorized charger complying with USB PD 2.0 or USB PD 3.0) which provides source capabilities and supported specification revision value. In case the charger doesn't provide a supported specification revision value, i.e., if the charger complies with USB PD 1.0, or the charger doesn't provide source capabilities requested by the accused device, the accused product will not consider the charger as an authorized charger and communication gets fail. The communication between charger and the accused product comes to a USB default operation at zero volts. 6.2.1.1.5 Specification Revision The *Specification Revision* field ***Shall*** be one of the following values (except 11b): • 00b –Revision 1.0 • 01b –Revision 2.0 • 10b – Revision 3.0 • 11b – ***Reserved, Shall Not*** be used To ensure interoperability with existing USBPD Products, USBPD Products ***Shall*** support every PD Specification Revision starting from *[USBPD 2.0]* for *SOP**; the only exception to this is a VPD which ***Shall Ignore*** Messages sent with PD Specification Revision 2.0 and earlier.

EXHIBIT 2

2.6.2 Sink Operation

- At Attach (no PD Connection or Contract):
  - Sink detects Source Attachment through the presence of ***vSafe5V***.
  - For a DRP that toggles the Port becomes a Sink Port on Attachment of a Source.
  - Once the Sink detects the presence of ***vSafe5V*** on V_{BUS} it waits for a ***Source_Capabilities*** Message indicating the presence of a PD capable Source.
  - If the Sink does not receive a ***Source_Capabilities*** Message within ***tTypeCSinkWaitCap*** then it issues ***Hard Reset*** Signaling in order to cause the Source Port to send a ***Source_Capabilities*** Message if the Source Port is PD capable.
  - The Sink does not generate SOP' or SOP'' Packets, is not required to detect SOP' or SOP'' Packets and does not recognize them.
- Establishing PD Connection (no PD Connection or Contract):
  - The Sink receives a ***Source_Capabilities*** Message and responds with a ***GoodCRC*** Message.
  - The Sink does not generate SOP' or SOP'' Packets, is not required to detect SOP' or SOP'' Packets and ***Discards*** them.
- Establishing Explicit Contract (PD Connection but no Explicit Contract or Implicit Contract after a Power Role Swap or Fast Role Swap):
  - The Sink receives a ***Source_Capabilities*** Message from the Source and responds with a ***Request*** Message. If this is a ***Valid*** request the Sink receives an ***Accept*** Message followed by a ***PS_RDY*** Message when the Source's power supply is ready to source power at the agreed level. At this point the Source and Sink have entered into an Explicit Contract:
    - The Sink Port may request one of the capabilities offered by the Source, even if this is the ***vSafe5V*** output offered by ***[USB 2.0]***, ***[USB 3.2]***, ***[USB Type-C 2.0]*** or ***[USBBC 1.2]***, in order to enable future power negotiation:
      - A Sink not requesting any capability with a ***Request*** Message results in an error.
    - A Sink unable to fully operate at the offered capabilities requests the default capability but indicates that it would prefer another power level and provide a physical indication of the failure to the end user (e.g. using an LED).
    - A Sink does not generate SOP' or SOP'' Packets, is not required to detect SOP' or SOP'' Packets and ***Discards*** them.

EXHIBIT 2

<table>
<tr>
<td></td>
<td>
8.3.3.2.8 PE_SRC_Capability_Response State

The Policy Engine Shall enter the PE_SRC_Capability_Response state if there is a Request received from the Sink that cannot be met based on the present capabilities. When the present Contract is not within the present capabilities it is regarded as Invalid and a Hard Reset will be triggered.

7.1.5 Response to Hard Resets

Hard Reset Signaling indicates a communication failure has occurred and the Source Shall stop driving VCONN, Shall remove Rp from the VCONN pin and Shall drive VBUS to vSafe0V as shown in Figure 7-10. The USB connection May reset during a Hard Reset since the VBUS voltage will be less than vSafe5V for an extended period of time. After establishing the vSafe0V voltage condition on VBUS, the Source Shall wait tSrcRecover before re-applying VCONN and restoring VBUS to vSafe5V. A Source Shall conform to the VCONN timing as specified in [USB Type-C 2.0].

Device operation during and after a Hard Reset is defined as follows:
• Self-powered devices Should Not disconnect from USB during a Hard Reset (see Section 9.1.2).
• Self-powered devices operating at more than vSafe5V May Not maintain full functionality after a Hard Reset.
• Bus powered devices will disconnect from USB during a Hard Reset due to the loss of their power source.

When a Hard Reset occurs the Source Shall stop driving VCONN, Shall remove Rp from the VCONN pin and Shall start to transition the VBUS voltage to vSafe0V either:
• tPSHardReset after the last bit of the Hard Reset Signaling has been received from the Sink or
• tPSHardReset after the last bit of the Hard Reset Signaling has been sent by the Source.

The Source Shall meet both tSafe5V and tSafe0V relative to the start of the voltage transition as shown in Figure 7-10.

<table>
<tr><td>vSafe0V</td><td>Safe operating voltage at “zero volts”.</td></tr>
</table>

Source: USB PD 3.0 specification.PDF
</td>
</tr>
<tr>
<td>in response to determining that the charger identification is in the list of charger identifications:</td>
<td>The accused product utilizes a device (e.g., smartphone, etc.) which, in response to determining that the charger identification (e.g., identification information related to specification revision value as well as capabilities indicated in the Source_Capabilities message sent by the charger) is in the list of charger identifications (e.g.,</td>
</tr>
</table>

EXHIBIT 2

receiving the energy from the charger;	specification revision values and capabilities supported by the smartphone), receives the energy from the charger (e.g., USB PD compliant charger). Overview & Features Overview • Supports all USB Type-C® Power Delivery Performance Analy based charging like USB Power Delivery 3.0 and 2.0, Qualcomm Quick Charge™ 2.0/3.0/4/4+, Huawei SuperCharge, Samsung Adaptive Fast Charge, etc. • Also supports all charging technologies over USB micro-B, USB Type-A and Apple Lightning connectors through inexpensive USB Type-C adapters • Easily assess power charging performance and entry into Thunderbolt™, DisplayPort™, and other Alt-Modes • Conveniently view power, voltage, current, and USB PD protocol all on the same graph • Able to process poor USB power delivery protocol packets without crashing https://www.graniteriverlabs.com/en-us/test-solutions/protocol-power-test-solutions/grl-usb-pd-a1

EXHIBIT 2

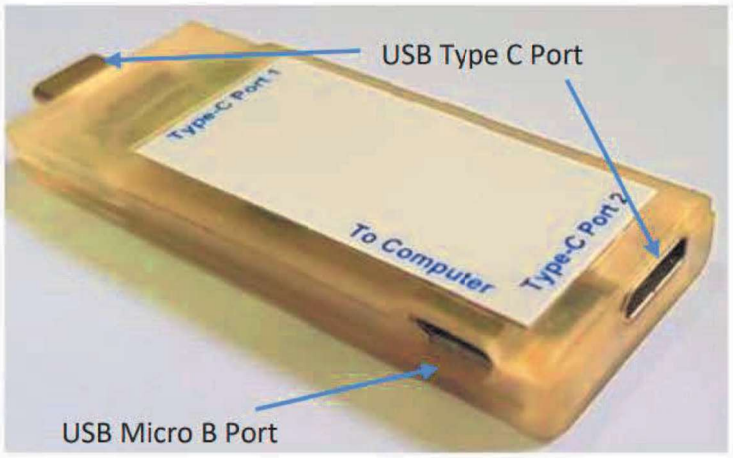

5.1 USB Type-C ™ Plug connector

To connect a USB Type-C ™ device that performs PD protocol analysis.

5.2 USB Type-C ™ Receptacle connector

To connect a USB Type-C ™ device that performs PD protocol analysis.

5.3 USB Micro-B connector

To connect the control PC for GRL-USB-PD-A1 Analyzer viewer.

Source: User Manual for GRL USB Type C Power Delivery

EXHIBIT 2

1.2 Connection image

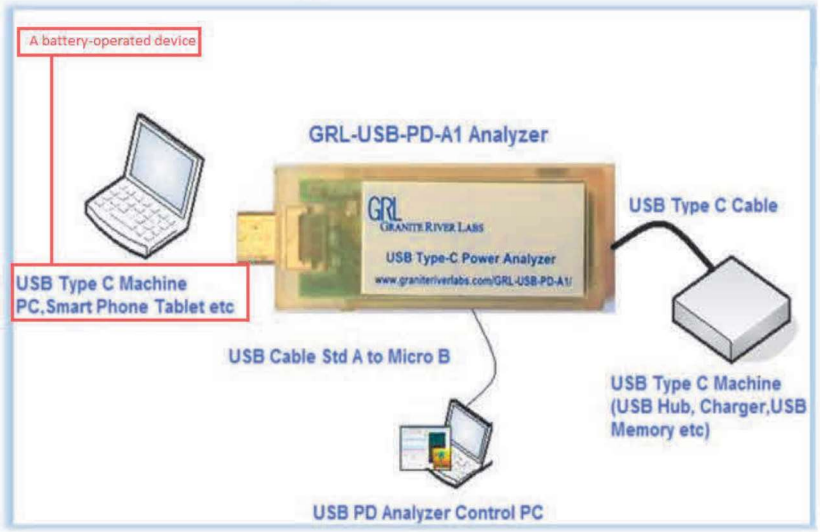



Source: User Manual for GRL USB Type C Power Delivery

An Attach event or a Hard Reset ***Shall*** cause the detection of the applicable Specification Revision to be performed for both Ports and Cable Plugs according to the rules stated below:

When the Source Port first communicates with the Sink Port the ***Specification Revision*** field ***Shall*** be used as described by the following steps:

1. The Source Port sends a ***Source Capabilities*** Message to the Sink Port setting the ***Specification Revision*** field to the highest Revision of the Power Delivery Specification the Source Port supports.
2. The Sink Port responds with a ***Request*** Message setting the ***Specification Revision*** field to the highest Revision of the Power Delivery Specification the Sink Port supports that is equal to or lower than the ***Specification Revision*** received from the Source Port.
3. The Source and Sink Ports ***Shall*** use the ***Specification Revision*** in the ***Request*** Message from the Sink in step 2 in all subsequent communications until a Detach, Hard Reset, or Error Recovery happens.

EXHIBIT 2

	6.4.1.3 Sink Capabilities Message A Sink Port ***Shall*** report power levels it is able to operate at in a series of 32-bit Power Data Objects (see Table 6-7). These are returned as part of a ***Sink_Capabilities*** Message in response to a ***Get_Sink_Cap*** Message (see Figure 6-12). This is similar to that used for Source Port capabilities with equivalent Power Data Objects for Fixed, Variable and Battery Supplies as defined in this section. Power Data Objects are used to convey the Sink Port's operational power requirements including Dual-Role Power Ports presently operating as a Source. Each Power Data Object ***Shall*** describe a specific Sink operational power level, such as a Battery (e.g. 2.8-4.1V) or a fixed power supply (e.g. 12V). The ***Number of Data Objects*** field in the Message Header ***Shall*** define the number of Power Data Objects that follow the Message Header in a Data Message. All Sinks ***Shall*** minimally offer one Power Data Object with a power level at which the Sink can operate. A Sink ***Shall Not*** offer multiple Power Data Objects of the same type (fixed, variable, Battery) and the same voltage but ***Shall*** instead offer one Power Data Object with the highest available current for that Sink capability and voltage. All Sinks ***Shall*** include one Power Data Object that reports ***vSafe5V*** even if they require additional power to operate fully. In the case where additional power is required for full operation the Higher Capability bit ***Shall*** be set.

EXHIBIT 2

2.6.2 Sink Operation

- At Attach (no PD Connection or Contract):
  - Sink detects Source Attachment through the presence of ***vSafe5V***.
  - For a DRP that toggles the Port becomes a Sink Port on Attachment of a Source.
  - Once the Sink detects the presence of ***vSafe5V*** on V_{BUS} it waits for a ***Source_Capabilities*** Message indicating the presence of a PD capable Source.
  - If the Sink does not receive a ***Source_Capabilities*** Message within ***tTypeCSinkWaitCap*** then it issues ***Hard Reset*** Signaling in order to cause the Source Port to send a ***Source_Capabilities*** Message if the Source Port is PD capable.
  - The Sink does not generate SOP' or SOP'' Packets, is not required to detect SOP' or SOP'' Packets and does not recognize them.
- Establishing PD Connection (no PD Connection or Contract):
  - The Sink receives a ***Source_Capabilities*** Message and responds with a ***GoodCRC*** Message.
  - The Sink does not generate SOP' or SOP'' Packets, is not required to detect SOP' or SOP'' Packets and ***Discards*** them.
- Establishing Explicit Contract (PD Connection but no Explicit Contract or Implicit Contract after a Power Role Swap or Fast Role Swap):
  - The Sink receives a ***Source_Capabilities*** Message from the Source and responds with a ***Request*** Message. If this is a ***Valid*** request the Sink receives an ***Accept*** Message followed by a ***PS_RDY*** Message when the Source's power supply is ready to source power at the agreed level. At this point the Source and Sink have entered into an Explicit Contract:
    - The Sink Port may request one of the capabilities offered by the Source, even if this is the ***vSafe5V*** output offered by ***[USB 2.0]***, ***[USB 3.2]***, ***[USB Type-C 2.0]*** or ***[USBBC 1.2]***, in order to enable future power negotiation:
      - A Sink not requesting any capability with a ***Request*** Message results in an error.
    - A Sink unable to fully operate at the offered capabilities requests the default capability but indicates that it would prefer another power level and provide a physical indication of the failure to the end user (e.g. using an LED).
    - A Sink does not generate SOP' or SOP'' Packets, is not required to detect SOP' or SOP'' Packets and ***Discards*** them.

Source: USB PD 3.0 specification.PDF

EXHIBIT 2

generating, using the converter, the power from the energy received from the charger;	The accused product utilizes a device (e.g., a smartphone) practices generating, using the converter (e.g., converting power from USB to battery charging), the power from the energy received from the charger (e.g., USB PD charger). The accused product tests USB PD 3.0 charging. It utilizes a smartphone and charger compliant with USB PD 3.0 charging standard. The USB PD 3.0 standard provides the same output power support as the USB PD 2.0 and in addition provides programmable power supply (PPS) and is backward compatible with USB PD 2.0 for charging the battery. 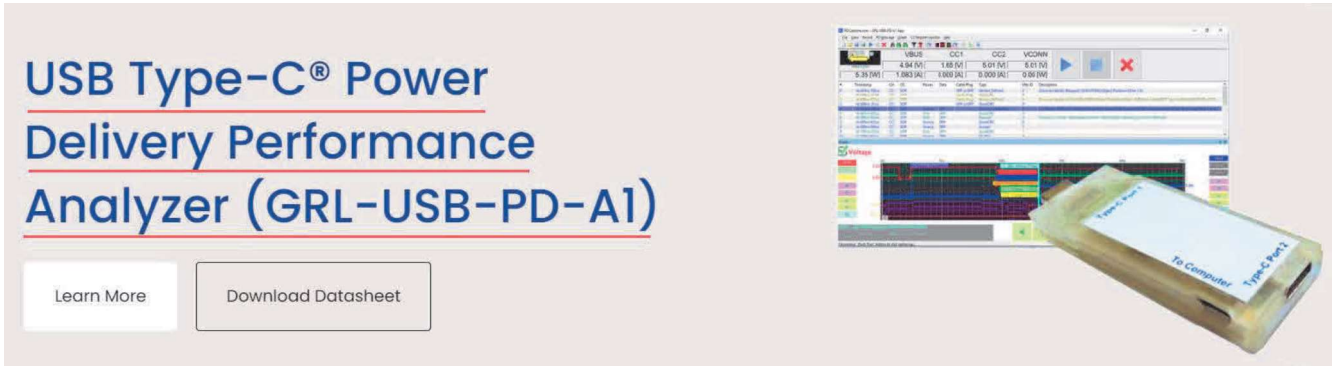 https://www.graniteriverlabs.com/en-us/test-solutions/protocol-power-test-solutions/grl-usb-pd-a1

EXHIBIT 2

	Overview & Features **Overview** • Supports all USB Type-C® Power Delivery Performance Analy based charging like USB Power Delivery 3.0 and 2.0, Qualcomm Quick Charge™ 2.0/3.0/4/4+, Huawei SuperCharge, Samsung Adaptive Fast Charge, etc. • Also supports all charging technologies over USB micro-B, USB Type-A and Apple Lightning connectors through inexpensive USB Type-C adapters • Easily assess power charging performance and entry into Thunderbolt™, DisplayPort™, and other Alt-Modes • Conveniently view power, voltage, current, and USB PD protocol all on the same graph • Able to process poor USB power delivery protocol packets without crashing https://www.graniteriverlabs.com/en-us/test-solutions/protocol-power-test-solutions/grl-usb-pd-a1

EXHIBIT 2

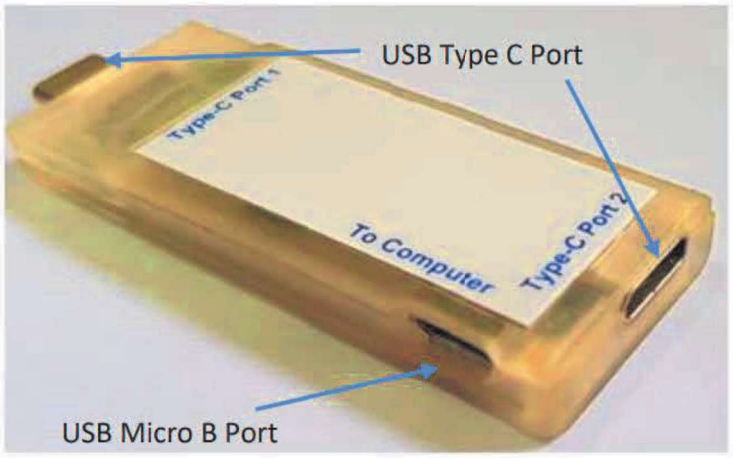

5.1 USB Type-C ™ Plug connector

To connect a USB Type-C ™ device that performs PD protocol analysis.

5.2 USB Type-C ™ Receptacle connector

To connect a USB Type-C ™ device that performs PD protocol analysis.

5.3 USB Micro-B connector

To connect the control PC for GRL-USB-PD-A1 Analyzer viewer.

Source: User Manual for GRL USB Type C Power Delivery

EXHIBIT 2

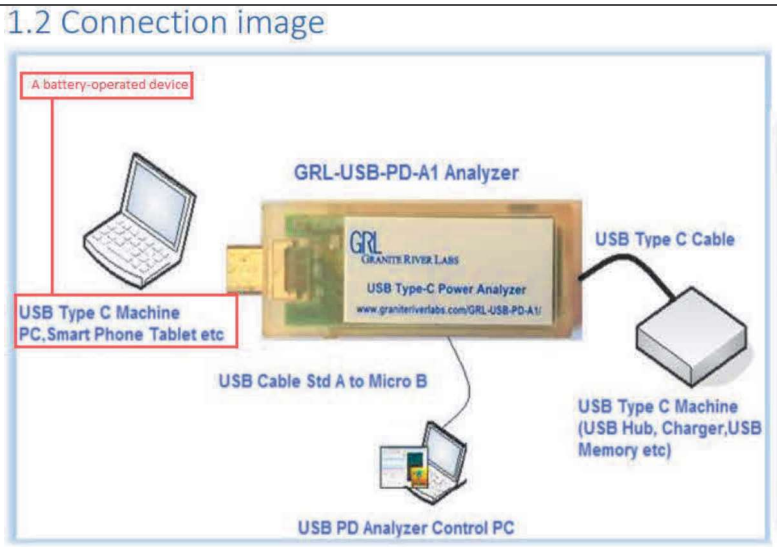



Source: User Manual for GRL USB Type C Power Delivery

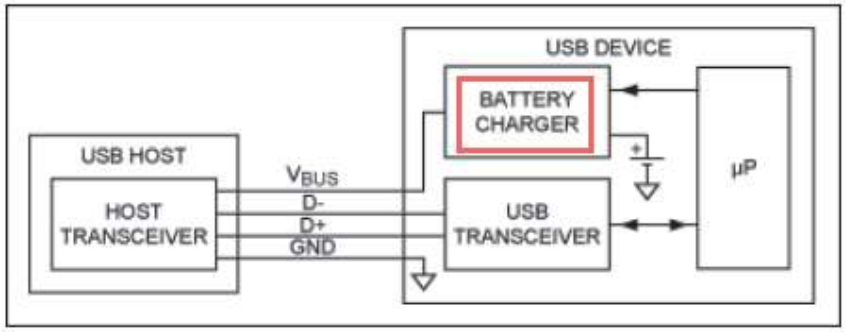

https://www.electronicproducts.com/the-basics-of-usb-battery-charging-a-survival-guide/#

EXHIBIT 2

charging the battery using the power received from the converter; and using the battery to power the electronic circuitry.	The accused product utilizes a device which practices charging the battery (e.g., battery of the smartphone) using the power received from the converter (e.g., converting power from USB to battery charging) and using the battery to power the electronic circuitry (e.g., camera, display, etc. of the smartphone). The accused product tests USB PD 3.0 charging. It utilizes a smartphone and charger compliant with USB PD 3.0 charging standard. The USB PD 3.0 standard provides the same output power support as the USB PD 2.0 and in addition provides programmable power supply (PPS) and is backward compatible with USB PD 2.0 for charging the battery. 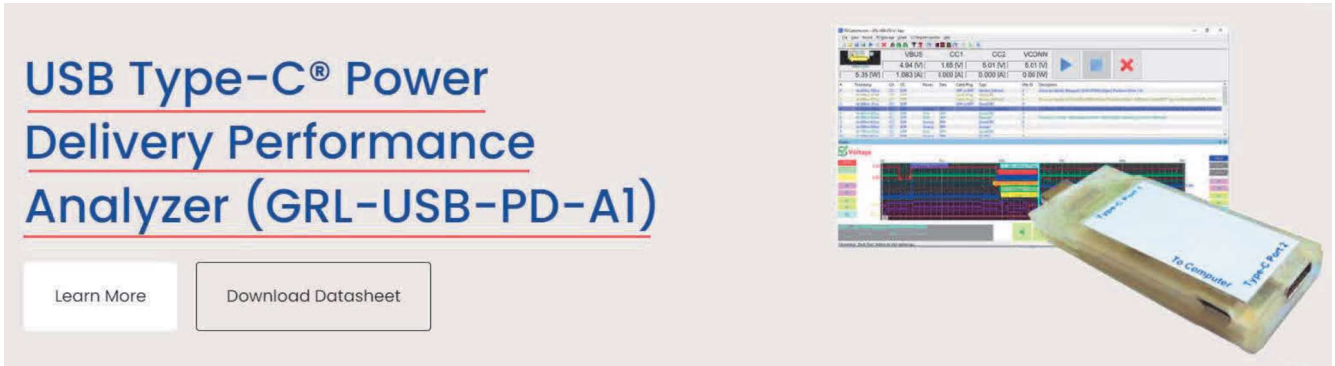 https://www.graniteriverlabs.com/en-us/test-solutions/protocol-power-test-solutions/grl-usb-pd-a1

EXHIBIT 2

	Overview & Features **Overview** • Supports all USB Type-C® Power Delivery Performance Analy based charging like USB Power Delivery 3.0 and 2.0, Qualcomm Quick Charge™ 2.0/3.0/4/4+, Huawei SuperCharge, Samsung Adaptive Fast Charge, etc. • Also supports all charging technologies over USB micro-B, USB Type-A and Apple Lightning connectors through inexpensive USB Type-C adapters • Easily assess power charging performance and entry into Thunderbolt™, DisplayPort™, and other Alt-Modes • Conveniently view power, voltage, current, and USB PD protocol all on the same graph • Able to process poor USB power delivery protocol packets without crashing https://www.graniteriverlabs.com/en-us/test-solutions/protocol-power-test-solutions/grl-usb-pd-a1

EXHIBIT 2

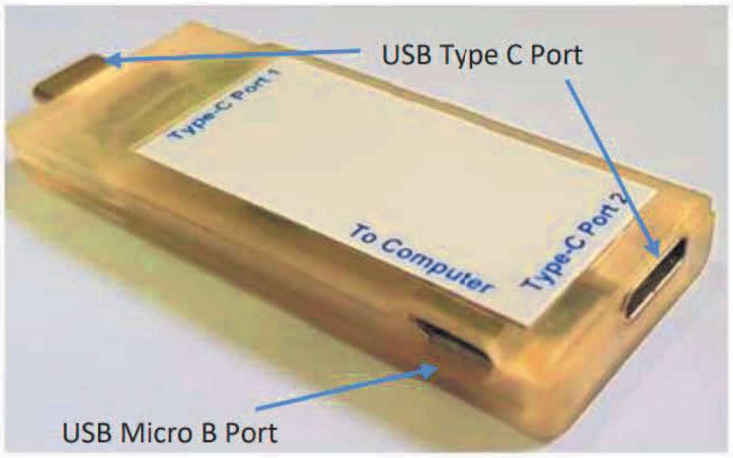

5.1 USB Type-C ™ Plug connector

To connect a USB Type-C ™ device that performs PD protocol analysis.

5.2 USB Type-C ™ Receptacle connector

To connect a USB Type-C ™ device that performs PD protocol analysis.

5.3 USB Micro-B connector

To connect the control PC for GRL-USB-PD-A1 Analyzer viewer.

Source: User Manual for GRL USB Type C Power Delivery

EXHIBIT 2

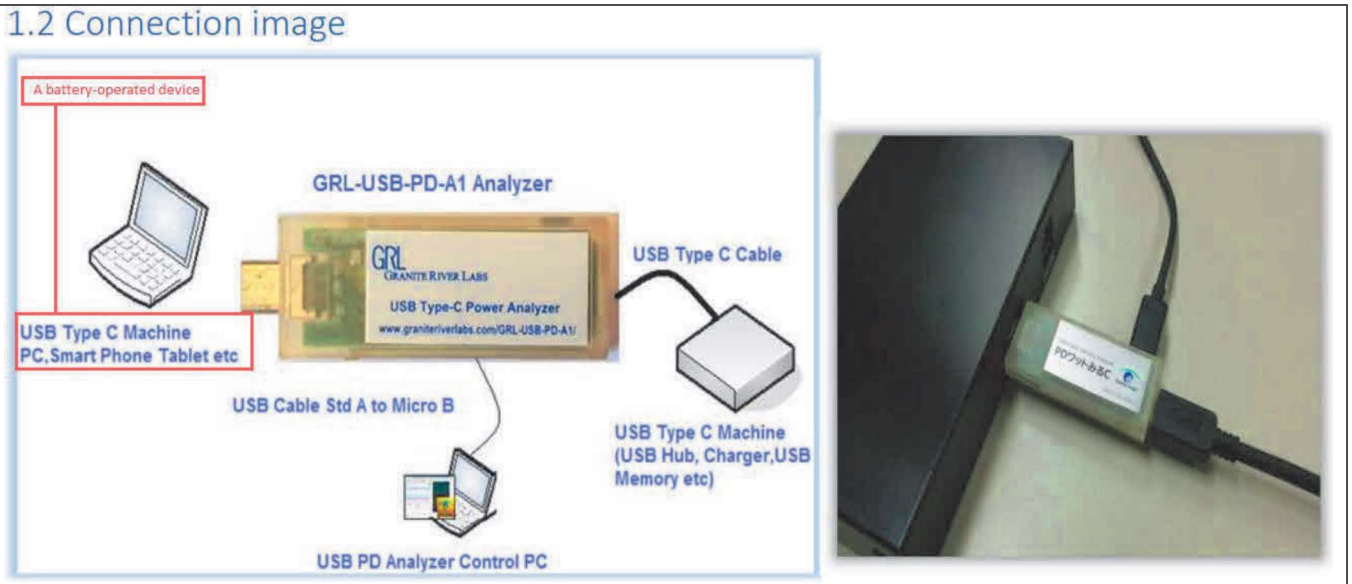

Source: User Manual for GRL USB Type C Power Delivery

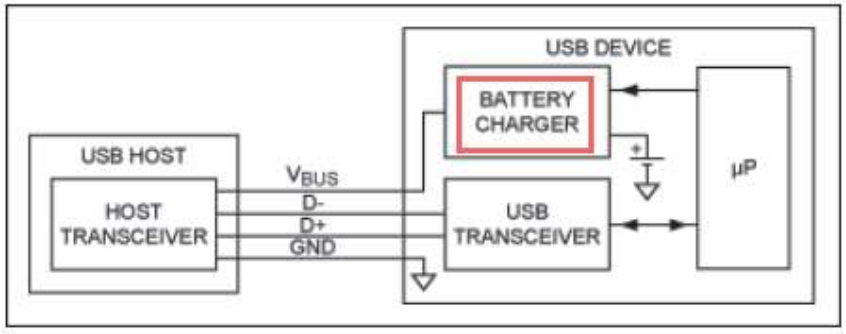

https://www.electronicproducts.com/the-basics-of-usb-battery-charging-a-survival-guide/#

EXHIBIT 2

	A smartphone comprises circuitries for camera, display system, etc. which are powered by the battery of the smartphone. **What's Inside My Smartphone? — An In-Depth Look At Different Components Of A Smartphone** Fossbytes Staff June 24, 2017 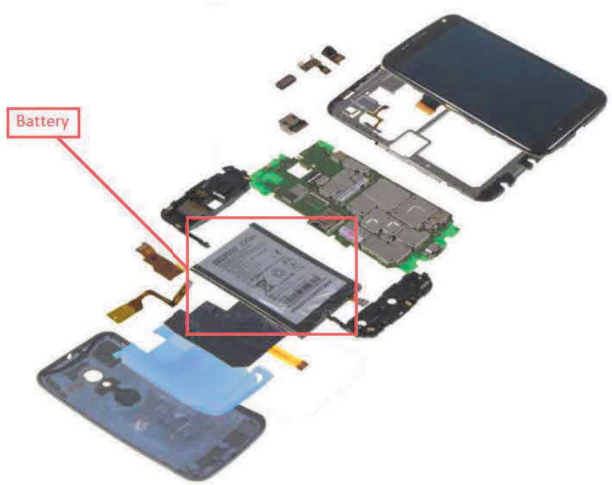 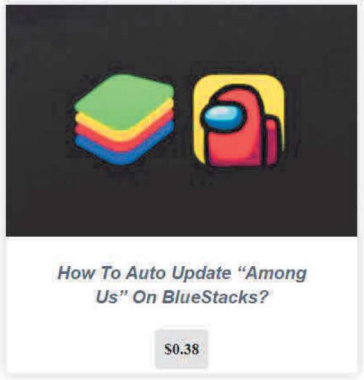 https://fossbytes.com/whats-inside-smartphone-depth-look-parts-powering-everyday-gadget/

EXHIBIT 2

	2. Battery  https://fossbytes.com/whats-inside-smartphone-depth-look-parts-powering-everyday-gadget/

EXHIBIT 2

	What's Inside My Smartphone? — An In-Depth Look At Different Components Of A Smartphone Fossbytes Staff June 24, 2017 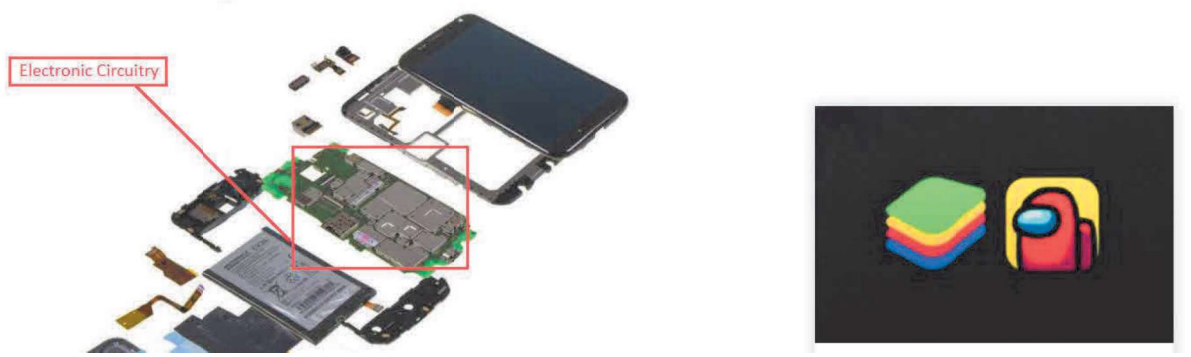 https://fossbytes.com/whats-inside-smartphone-depth-look-parts-powering-everyday-gadget/

EXHIBIT 2

	3. 'System-on-a-chip' or SoC 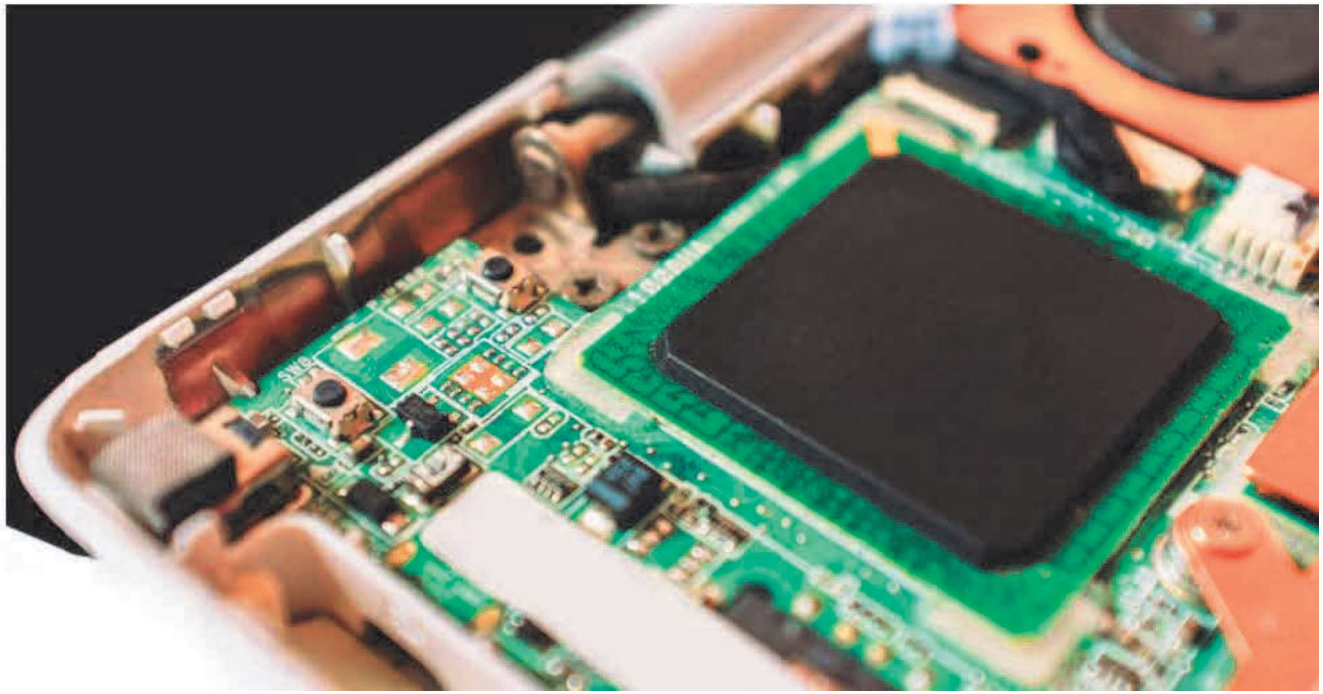 https://fossbytes.com/whats-inside-smartphone-depth-look-parts-powering-everyday-gadget/

IN THE UNITED STATES DISTRICT COURT
FOR THE DISTRICT OF DELAWARE

WAVERLY LICENSING LLC, Plaintiff, v. **AT&T, INC.,** Defendant.	Civil Action No.: 1:22-cv-00420-CFC **TRIAL BY JURY DEMANDED**

AMENDED CORPORATE DISCLOSURE STATEMENT

Pursuant to Rule 7.1 of the Federal Rules of Civil Procedure, and this Court's April 18, 2022 Standing Order Regarding Disclosure Statements, Plaintiff Waverly Licensing LLC hereby submits its Amended Corporate Disclosure Statement. Plaintiff states that it is a Texas limited liability company, its sole owner and managing partner is Son Nguyen, it does not have a parent corporation, and no publicly held corporation owns ten percent (10%) or more of its stock.

Dated: September 2, 2022

Respectfully submitted,

CHONG LAW FIRM PA

/s/ Jimmy Chong

Jimmy Chong (#4839)
2961 Centerville Road, Suite 350
Wilmington, DE 19808
Telephone: (302) 999-9480
Facsimile: (302) 800-1999
Email: patent@chonglawfirm.com

ATTORNEYS FOR PLAINTIFF

UNITED STATES DISTRICT COURT
FOR THE DISTRICT OF DELAWARE

WAVERLY LICENSING LLC, **Plaintiff,** **v.** **GRANITE RIVER LABS INC.,** **Defendant.**	**Civil Action No. 1:22-cv-00422-CFC**

JOINT STIPULATION TO DISMISS

Now comes Plaintiff, Waverly Licensing LLC and Defendant, Granite River Labs Inc., by and through their counsel, pursuant to Fed. R. Civ. P 41(a)(2), hereby jointly stipulate and agree as follows:

Plaintiff voluntarily dismisses all of the claims asserted against Defendant Granite River Labs Inc. in the within action With Prejudice with each party bearing their own costs and fees.

Defendant voluntarily dismisses all of its counterclaims asserted against Plaintiff Waverly Licensing LLC in the within action Without Prejudice with each party bearing their own costs and fees.

Dated: September 21, 2022

CHONG LAW FIRM PA

/s/ Jimmy Chong

Respectfully Submitted,

ASHBY & GEDDES

/s/ Steven J. Balick

Jimmy Chong (#4839)
2961 Centerville Road, Suite 350
Wilmington, DE 19808
Telephone: (302) 999-9480
Facsimile: (302) 800-1999
Email: patent@chonglawfirm.com

ATTORNEY FOR PLAINTIFF

Steven J. Balick (#2114)
Andrew C. Mayo (#5207)
500 Delaware Avenue, 8th Floor
P.O. Box 1150
Wilmington, DE 19899
(302) 654-1888
sbalick@ashbygeddes.com
amayo@ashbygeddes.com

SQUIRE PATTON BOGGS (US) LLP
Adam R. Hess (pro hac vice)
Alex E. Wolcott (pro hac vice)
2550 M Street, NW
Washington, DC 20037
(202) 457-6000
adam.hess@squirepb.com
alex.wolcott@squirepb.com

Attorneys for Defendant
Granite River Labs Inc.

SO ORDERED this ____ day of September, 2022.

_____
CHIEF JUDGE

THE CHONG LAW FIRM, P.A.
Licensed in: Delaware, New Jersey, Pennsylvania

October 6, 2022

VIA ECF
Hon. Colm F. Connolly
United States Chief District Judge
District of Delaware
J. Caleb Boggs Federal Building
844 North King Street
Unit 31
Room 4124
Wilmington, Delaware 19801-3555

RE: *Waverly Licensing LLC v. AT&T, Inc.,*
Civil Action No. 1:22-cv-00420-CFC
Waverly Licensing LLC v. Granite River Labs Inc.,
Civil Action No. 1:22-cv-00422-CFC

Dear Judge Connolly:

In response to the Court's Memorandum Order (D.I. #16) setting an evidentiary hearing in the case captioned above, Plaintiff Waverly Licensing LLC ("Plaintiff") seeks clarification and guidance from the Court so Plaintiff can bring any additional documents or evidence to the evidentiary hearing.

Plaintiff does not receive from a person or entity that is not a party funding for some or all of the party's attorneys' fees and/or expense to litigate this action on a non-recourse basis. Plaintiff hired its attorney at Chong Law Firm PA on a contingency fee basis. Although Plaintiff's attorneys have a financial interest that is contingent on the results of the litigation, no third-party funding is received to pay for the attorneys' fees. All funding received by Plaintiff for this litigation, including the advance of any expenses, is provided on a recourse basis.

Accordingly, Plaintiff respectfully requests guidance from the Court regarding any further documents or evidence it seeks to obtain in the scheduled

evidentiary hearing so Plaintiff may be fully responsive and ensure that the requested information is available to the Court.

If there are any further questions or concerns, please contact the undersigned at the Court's convenience.

Respectfully submitted,

CHONG LAW FIRM PA

/s/ Jimmy Chong

Jimmy Chong (#4839)
2961 Centerville Road, Suite 350
Wilmington, DE 19808
Telephone: (302) 999-9480
Facsimile: (302) 800-1999
Email: patent@chonglawfirm.com

IN THE UNITED STATES DISTRICT COURT
FOR THE DISTRICT OF DELAWARE

WAVERLY LICENSING LLC, Plaintiff, v. **AT&T, INC.,** Defendant.	Civil Action No.: 1:22-cv-00420-CFC **TRIAL BY JURY DEMANDED**
WAVERLY LICENSING LLC, Plaintiff, v. **GRANITE RIVER LABS INC.** Defendant.	Civil Action No.: 1:22-cv-00422-CFC

DECLARATION OF SON NGUYEN

I, Son Nguyen, declare as follows:

1. I am the managing member and sole owner of Waverly Licensing LLC. I have personal knowledge of the facts set forth in this Declaration. I am competent to testify as to all matters stated, and I am not under any legal disability that would in any way preclude me from testifying.

2. Plaintiff Waverly Licensing LLC's Amended Rule 7.1 Disclosure Statement submitted at D.I. 15 in C.A. No. 22-cv-420-CFC and D.I. 14 in C.A. No. 1:22-cv-00422-CFC complies with the Court's April 18, 2022, Standing Order Regarding Disclosure Statements Required by Federal Rule of Civil Procedure 7.1 and discloses the name of every owner, member,

and partner of Waverly Licensing LLC, proceeding up the chain of ownership until the name of every individual and corporation with a direct or indirect interest in the party has been identified.

3. Waverly Licensing LLC does not have arrangements to receive from a person or entity that is not a party funding for some or all of the party's attorney fees and/or expenses to litigate this action on a non-recourse basis in exchange for (1) a financial interest that is contingent upon the results of the litigation or (2) a non-monetary result that is not in the nature of a personal loan, bank loan, or insurance. Apart from the statement provided, Waverly Licensing LLC therefore has no additional information responsive to the Court's April 18, 2022, Court's Standing Order Regarding Third-Party Litigation Funding Arrangements.

I declare under penalty of perjury that the foregoing is true and correct and that I have signed this declaration in Sugar Land, Texas on October 03, 2022.

Son Nguyen

Son Nguyen
Managing Member, Waverly Licensing LLC

IN THE UNITED STATES DISTRICT COURT
FOR THE DISTRICT OF DELAWARE

WAVERLY LICENSING LLC, Plaintiff, v. **AT&T MOBILITY LLC,** Defendant.	Civil Action No.: 1:22-cv-00420-CFC **TRIAL BY JURY DEMANDED**

UNOPPOSED MOTION TO STAY ALL DEADLINES AND NOTICE OF RESOLUTION

Plaintiff Waverly Licensing LLC ("Waverly") and Defendant AT&T Mobility LLC. ("AT&T") files this Unopposed Motion to Stay All Deadlines and Notice of Resolution because all matters in controversy between Waverly and AT&T have been resolved in principle. The parties require additional time to finalize their resolution and dismiss the case. The parties, therefore, respectfully request that all hearings and deadlines be stayed for an additional thirty (30) days, through December 21, 2022.

Dated: November 17, 2022

Respectfully submitted,

CHONG LAW FIRM PA

/s/ Jimmy Chong
Jimmy Chong (#4839)
2961 Centerville Road, Suite 350
Wilmington, DE 19808
Telephone: (302) 999-9480

Facsimile: (302) 800-1999
Email: patent@chonglawfirm.com

ATTORNEY FOR PLAINTIFF

SO ORDERED this _____ day of November, 2022.

_____
UNITED STATES DISTRICT JUDGE

IN THE UNITED STATES DISTRICT COURT
FOR THE DISTRICT OF DELAWARE

WAVERLY LICENSING LLC, Plaintiff, v. **AT&T MOBILITY LLC,** Defendant.	Civil Action No.: 1:22-cv-00420-CFC **TRIAL BY JURY DEMANDED**
WAVERLY LICENSING LLC, Plaintiff, v. **GRANITE RIVER LABS INC.** Defendant.	Civil Action No.: 1:22-cv-00422-CFC

PLAINTIFF'S MOTION TO STAY

On November 15, 2022, Nimitz Technologies LLC ("Nimitz") filed with the United States Court of Appeals for the Federal Circuit a *Petition for Writ of Mandamus* in connection with cases Civ. No. 21-1247-CFC, Civ. No. 21-1362-CFC, Civ. No. 21-1855-CFC and Civ. No. 22-413-CFC (the "Nimitz Petition"). *In re Nimitz Technologies LLC*, No. 23-103 (Fed. Cir.). On November 17, 2022, the Court of Appeals for the Federal Circuit ordered briefing of Nimitz' Petition and stayed the Memorandum Order involved in the Nimitz Petition "pending further action of [the Federal Circuit]."

Plaintiff Waverly Licensing, LLC has met and conferred with Defendants. A dismissal was filed in Waverly Licensing, LLC v. Granite River Labs, Inc. Defendant Granite River Labs, Inc. does not take a position on this motion. In Waverly Licensing LLC v. AT&T Mobility LLC has recently resolved it matter and has filed a Notice of Resolution and Motion to Stay All Deadlines.

Plaintiff Waverly Licensing, LLC, by and through undersigned counsel, respectfully moves this Court to stay any and all Orders and/or further proceedings in the above-captioned cases, including staying the evidentiary hearing scheduled for December 6, 2022, until such time as the Federal Circuit terminates the stay in connection with the Nimitz Petition.

This Court has discretion to stay litigation pending before the Court. Three factors are considered when deciding a motion to stay: (a) whether granting the stay will simplify the issues for trial; (b) the status of the litigation, particularly whether discovery is complete and a trial date has been set; and (c) whether a stay would cause the non-movant to suffer undue prejudice from any delay, or allow the movant to gain a clear tactical advantage. *E.g.*, *C.R. Bard, Inc. v. AngioDynamics, Inc.*, 2022 U.S. Dist. LEXIS 36636 at *8 (D. Del. 2022). *St. Clair Intellectual Prop. Consultants, Inc. v. Sony Corp.*, 2003 U.S. Dist. LEXIS 27397, *3 (D.Del. Jan. 30, 2003).

Plaintiff submits that the decision on the Nimitz Petition will clarify jurisdictional concerns and is likely to be dispositive in the above-captioned cases as well. The captioned litigations already have been dismissed by a stipulation of dismissal or notice voluntary dismissal. *State Nat'l Ins. Co. v. County of Camden*, 824 F.3d 399, 407 (3rd Cir. 2016); *SmallBizPros, Inc. v. MacDonald*, 618 F.3d 458, 463 (3rd Cir. 2010); *First Nat'l Bank v. Marine City, Inc.*, 411 F.2d 674, 677 (3rd Cir. 1969). The requested stay would not cause Defendant to suffer any prejudice. Plaintiff further submits that a stay of the above-captioned cases will conserve party and judicial resources, including eliminating the need for multiple parallel petitions for mandamus.

With regard to stays pending appeals, the normal rule is that:

> In considering whether to grant a stay pending appeal, courts consider the following four factors: (1) whether the appellant has made a strong showing of the likelihood of success on the merits; (2) will the appellant suffer irreparable injury absent a stay; (3) would a stay substantially harm other parties with an interest in the litigation; and (4) whether a stay is in the public interest.

In re Revel AC, Inc., 802 F.3d 558, 565 (3d Cir. 2015). *See California v. Davis (In re Venoco, LLC)*, 2020 U.S. Dist. LEXIS 8349 at *6-7 (D. Del. 2020) (applying rule).

The above factors are met in this case. The Federal Circuit has stayed the Court's similar actions in the Nimitz cases, which implies that the Federal Circuit questions whether such proceedings should be occurring before they rule on the

Mandamus. Furthermore, unlike the Nimitz cases, these cases are already dismissed, and, thus, a stay of the Memorandum Order will not impact the proceedings of the case. Given that the cases are dismissed, there can be neither prejudice nor substantial harm to any party in granting the stay pending the Petition. At the same time, Plaintiff can suffer irreparable injury absent a stay as Plaintiff may be ordered to disclose highly confidential materials that the law may not consider relevant to any issue in the case. Finally, a stay is in the public interest because a stay will avoid the uncertainty of piecemeal litigation where Plaintiff may be forced to proceed in an unprecedented context while the validity of the process is being considered by an appellate court.

Very importantly, the stay will avoid the need for Plaintiff to file its own petition for a writ of mandamus. Plaintiff will be required to file the petition because these cases present the additional factor that the cases have been dismissed pursuant to Fed. R. Civ. P. 41(a) and thus will raise the question of whether this Court has jurisdiction *vel non* to pursue its *sua sponte* inquiries. Thus, a stay of the above-captioned cases will conserve party and judicial resources, including eliminating the need for multiple parallel petitions for mandamus.

The duration of the requested stay should extend until the Federal Circuit has ruled on the Nimitz Petition.

Alternatively, Plaintiff respectfully requests a stay of the above-captioned cases on grounds that the Court does not have any Article III jurisdiction to order the hearings and to order Plaintiffs' principals to appear at a hearing after the cases have been dismissed. *State Nat'l Ins. Co.*, 824 F.3d at 407; *SmallBizPros*, 618 F.3d at 463; *First Nat'l Bank*, 411 F.2d at 677. There is no case or controversy to support the Court's authority to proceed.

Plaintiff further states that the evidentiary hearings are improper because (1) the Court did independent factual research without giving notice to the parties, (2) the Court did not disclose the independent factual research to the parties, (3) the Court relied on information from its independent factual research when entering its order on the hearing, yet the Court did not give the parties the opportunity to object to whether the Court should properly take judicial notice of the information found during its factual research, and (4) the Court did not disclose in its hearing order the factual basis for the Court's concern that Plaintiff's disclosures were not accurate. *Woods v Showers*, 822 Fed. Appx. 122, 126 (3rd Cir 2020) (non-precedential); *Pickett v. Sheridan Health Care Ctr.*, 664 F.3d 632, 650-651 (7th Cir. 2011; *United States v. Brocato*, 4 F.4th 296, 303-304 (5th Cir. 2021).

Thus, Plaintiffs further request that such a stay of the above-captioned cases be continued until the Court (a) discloses the independent factual research that it performed (*e.g.*, Internet searches, articles, websites, publicly available documents,

discussions with persons who are not staff or employees of the Court); (b) discloses the facts (whether obtained through its independent factual research or otherwise) it relied on for the Court's concern that Plaintiff's statement that Plaintiff did not receive any non-recourse third-party funding was not accurate; and (c) Plaintiff has an opportunity to object to the Court taking judicial notice of such information as a basis for entering its hearing Order.

A proposed form of Order is attached.

Pursuant to D. Del. Local Rule 7.1.1, counsel for the parties conferred prior to the filing of this motion.

Dated: November 18, 2022

Respectfully submitted,

CHONG LAW FIRM PA

/s/ Jimmy Chong
Jimmy Chong (#4839)
2961 Centerville Road, Suite 350
Wilmington, DE 19808
Telephone: (302) 999-9480
Facsimile: (302) 800-1999
Email: patent@chonglawfirm.com

ATTORNEYS FOR PLAINTIFF

IN THE UNITED STATES DISTRICT COURT
FOR THE DISTRICT OF DELAWARE

WAVERLY LICENSING LLC, Plaintiff, v. **AT&T MOBILITY LLC,** Defendant.	Civil Action No.: 1:22-cv-00420-CFC **TRIAL BY JURY DEMANDED**
WAVERLY LICENSING LLC, Plaintiff, v. **GRANITE RIVER LABS INC.** Defendant.	Civil Action No.: 1:22-cv-00422-CFC

PLAINTIFF'S REVISED MOTION TO STAY

On November 15, 2022, Nimitz Technologies LLC ("Nimitz") filed with the United States Court of Appeals for the Federal Circuit a *Petition for Writ of Mandamus* in connection with cases Civ. No. 21-1247-CFC, Civ. No. 21-1362-CFC, Civ. No. 21-1855-CFC and Civ. No. 22-413-CFC (the "Nimitz Petition"). *In re Nimitz Technologies LLC*, No. 23-103 (Fed. Cir.). On November 17, 2022, the Court of Appeals for the Federal Circuit ordered briefing of Nimitz' Petition and stayed the Memorandum Order involved in the Nimitz Petition "pending further action of [the Federal Circuit]."

Plaintiff Waverly Licensing, LLC has met and conferred with Defendants. A dismissal was filed in Waverly Licensing, LLC v. Granite River Labs, Inc. Defendant Granite River Labs, Inc. does not take a position on this motion. In Waverly Licensing LLC v. AT&T Mobility LLC has recently resolved it matter and has filed a Notice of Resolution and Motion to Stay All Deadlines.

Plaintiff Waverly Licensing, LLC, by and through undersigned counsel, respectfully moves this Court to stay any and all Orders and/or further proceedings in the above-captioned cases, including staying the evidentiary hearing scheduled for December 6, 2022, until such time as the Federal Circuit terminates the stay in connection with the Nimitz Petition.

This Court has discretion to stay litigation pending before the Court. Three factors are considered when deciding a motion to stay: (a) whether granting the stay will simplify the issues for trial; (b) the status of the litigation, particularly whether discovery is complete and a trial date has been set; and (c) whether a stay would cause the non-movant to suffer undue prejudice from any delay, or allow the movant to gain a clear tactical advantage. *E.g.*, *C.R. Bard, Inc. v. AngioDynamics, Inc.*, 2022 U.S. Dist. LEXIS 36636 at *8 (D. Del. 2022). *St. Clair Intellectual Prop. Consultants, Inc. v. Sony Corp.*, 2003 U.S. Dist. LEXIS 27397, *3 (D.Del. Jan. 30, 2003).

Plaintiff submits that the decision on the Nimitz Petition will clarify jurisdictional concerns and is likely to be dispositive in the above-captioned cases as well. The captioned litigations already have been dismissed by a stipulation of dismissal or notice voluntary dismissal.[1] *State Nat'l Ins. Co. v. County of Camden*, 824 F.3d 399, 407 (3rd Cir. 2016); *SmallBizPros, Inc. v. MacDonald*, 618 F.3d 458, 463 (3rd Cir. 2010); *First Nat'l Bank v. Marine City, Inc.*, 411 F.2d 674, 677 (3rd Cir. 1969). The requested stay would not cause Defendant to suffer any prejudice. Plaintiff further submits that a stay of the above-captioned cases will conserve party and judicial resources, including eliminating the need for multiple parallel petitions for mandamus.

With regard to stays pending appeals, the normal rule is that:

> In considering whether to grant a stay pending appeal, courts consider the following four factors: (1) whether the appellant has made a strong showing of the likelihood of success on the merits; (2) will the appellant suffer irreparable injury absent a stay; (3) would a stay substantially harm other parties with an interest in the litigation; and (4) whether a stay is in the public interest.

In re Revel AC, Inc., 802 F.3d 558, 565 (3d Cir. 2015). *See California v. Davis (In re Venoco, LLC)*, 2020 U.S. Dist. LEXIS 8349 at *6-7 (D. Del. 2020) (applying rule).

[1] A dismissal in Waverly Licensing LLC v. AT&T Mobility LLC will be filed prior to the 12/6 scheduled hearing and as noted above, there has been an agreement between the parties that they have resolved all issues and agree to Stay All Deadlines.

The above factors are met in this case. The Federal Circuit has stayed the Court's similar actions in the Nimitz cases, which implies that the Federal Circuit questions whether such proceedings should be occurring before they rule on the Mandamus. Furthermore, unlike the Nimitz cases, these cases are already dismissed (other than Waverly v AT&T as noted above), and, thus, a stay of the Memorandum Order will not impact the proceedings of the case. Given that the cases are dismissed (other than Waverly v AT&T as noted above), there can be neither prejudice nor substantial harm to any party in granting the stay pending the Petition. At the same time, Plaintiff can suffer irreparable injury absent a stay as Plaintiff may be ordered to disclose highly confidential materials that the law may not consider relevant to any issue in the case. Finally, a stay is in the public interest because a stay will avoid the uncertainty of piecemeal litigation where Plaintiff may be forced to proceed in an unprecedented context while the validity of the process is being considered by an appellate court.

Very importantly, the stay will avoid the need for Plaintiff to file its own petition for a writ of mandamus. Plaintiff will be required to file the petition because these cases present the additional factor that the cases have been dismissed pursuant to Fed. R. Civ. P. 41(a) and thus will raise the question of whether this Court has

jurisdiction *vel non* to pursue its *sua sponte* inquiries.[2] Thus, a stay of the above-captioned cases will conserve party and judicial resources, including eliminating the need for multiple parallel petitions for mandamus.

The duration of the requested stay should extend until the Federal Circuit has ruled on the Nimitz Petition.

Alternatively, Plaintiff respectfully requests a stay of the above-captioned cases on grounds that the Court does not have any Article III jurisdiction to order the hearings and to order Plaintiffs' principals to appear at a hearing after the cases have been dismissed.[3] *State Nat'l Ins. Co.*, 824 F.3d at 407; *SmallBizPros*, 618 F.3d at 463; *First Nat'l Bank*, 411 F.2d at 677. There is no case or controversy to support the Court's authority to proceed.

Plaintiff further staters that the evidentiary hearings are improper because (1) the Court did independent factual research without giving notice to the parties, (2) the Court did not disclose the independent factual research to the parties, (3) the Court relied on information from its independent factual research when entering its order on the hearing, yet the Court did not give the parties the opportunity to object to whether the Court should properly take judicial notice of the information found

[2] A dismissal in Waverly Licensing LLC v. AT&T Mobility LLC will be filed prior to the 12/6 scheduled hearing and as noted above, there has been an agreement between the parties that they have resolved all issues and agree to Stay All Deadlines.

[3] A dismissal in Waverly Licensing LLC v. AT&T Mobility LLC will be filed prior to the 12/6 scheduled hearing and as noted above, there has been an agreement between the parties that they have resolved all issues and agree to Stay All Deadlines.

during its factual research, and (4) the Court did not disclose in its hearing order the factual basis for the Court's concern that Plaintiff's disclosures were not accurate. *Woods v Showers*, 822 Fed. Appx. 122, 126 (3rd Cir 2020) (non-precedential); *Pickett v. Sheridan Health Care Ctr.*, 664 F.3d 632, 650-651 (7th Cir. 2011; *United States v. Brocato*, 4 F.4th 296, 303-304 (5th Cir. 2021).

Thus, Plaintiffs further request that such a stay of the above-captioned cases be continued until the Court (a) discloses the independent factual research that it performed (*e.g.*, Internet searches, articles, websites, publicly available documents, discussions with persons who are not staff or employees of the Court); (b) discloses the facts (whether obtained through its independent factual research or otherwise) it relied on for the Court's concern that Plaintiff's statement that Plaintiff did not receive any non-recourse third-party funding was not accurate; and (c) Plaintiff has an opportunity to object to the Court taking judicial notice of such information as a basis for entering its hearing Order.

A proposed form of Order is attached.

Pursuant to D. Del. Local Rule 7.1.1, counsel for the parties conferred prior to the filing of this motion.

Dated: November 21, 2022

Respectfully submitted,

CHONG LAW FIRM PA

/s/ Jimmy Chong
Jimmy Chong (#4839)
2961 Centerville Road, Suite 350
Wilmington, DE 19808
Telephone: (302) 999-9480
Facsimile: (302) 800-1999
Email: patent@chonglawfirm.com

ATTORNEYS FOR PLAINTIFF

IN THE UNITED STATES DISTRICT COURT
FOR THE DISTRICT OF DELAWARE

WAVERLY LICENSING LLC,	)	
	)	
Plaintiff,	)	
	)	C.A. No. 22-420 (CFC)
v.	)	
	)	**JURY TRIAL DEMANDED**
AT&T MOBILITY LLC,	)	
	)	
Defendant.	)	

AT&T MOBILITY LLC'S CORPORATE DISCLOSURE STATEMENT

Pursuant to Federal Rule of Civil Procedure 7.1, Defendant AT&T Mobility LLC ("AT&T Mobility") hereby states the following:

1. AT&T Mobility, a Delaware Limited Liability Company, is owned by the following companies: SBC Long Distance, LLC; AT&T Investment & Tower Holdings, LLC; BellSouth Mobile Data, Inc., and New Cingular Wireless Services, Inc.

2. None of the companies listed are publicly-traded companies. All of the companies listed above are subsidiaries of AT&T Inc.

3. AT&T Inc., a Delaware corporation, is a publicly traded company on the New York Stock Exchange. There is no one person or group that owns 10% or more of the stock of AT&T Inc.

MORRIS, NICHOLS, ARSHT & TUNNELL LLP

/s/ Karen Jacobs

Karen Jacobs (#2881)
1201 North Market Street
P.O. Box 1347
Wilmington, DE 19899
(302) 658-9200
kjacobs@morrisnichols.com

Attorneys for Defendant
AT&T Mobility LLC.

November 21, 2022

IN THE UNITED STATES DISTRICT COURT
FOR THE DISTRICT OF DELAWARE

WAVERY LICENSING LLC, Plaintiff, v. **AT&T MOBILITY LLC,** Defendant.	Civil Action No.: 1:22-cv-00420-CFC **TRIAL BY JURY DEMANDED**

JOINT STIPULATION TO DISMISS

Now comes Plaintiff, Waverly Licensing LLC and Defendant, AT&T Mobility LLC, by and through their counsel, pursuant to Fed. R. Civ. P 41(a)(1)(A)(ii), hereby jointly stipulate and agree as follows:

Plaintiff voluntarily dismisses all of the claims asserted against Defendant AT&T Mobility LLC **with prejudice**, each party to bear its own costs and fees. No counterclaims have been asserted in the case.

Dated: November 28, 2022

Respectfully Submitted,

CHONG LAW FIRM PA

/s/ Jimmy Chong
Jimmy Chong (#4839)
2961 Centerville Road, Suite 350
Wilmington, DE 19808
Telephone: (302) 999-9480
Facsimile: (302) 800-1999

MORRIS, NICHOLS, ARSHT & TUNNELL LLP

/s/ Karen Jacobs
Karen Jacobs (#2881)
1201 N. Market Street
P.O. Box 1347
Wilmington, DE 19899

Email: patent@chonglawfirm.com

ATTORNEY FOR PLAINTIFF

(302) 658-9200
kjacobs@morrisnichols.com

ATTORNEY FOR DEFENDANT

SO ORDERED this ____ day of November, 2022.

_____
CHIEF JUDGE

PATENT ASSIGNMENT COVER SHEET

Electronic Version v1.1
Stylesheet Version v1.2

EPAS ID: PAT7294040

SUBMISSION TYPE:	NEW ASSIGNMENT
NATURE OF CONVEYANCE:	ASSIGNMENT

CONVEYING PARTY DATA

Name	Execution Date
ARRAY IP LLC	03/24/2022

RECEIVING PARTY DATA

Name:	WAVERLY LICENSING LLC
Street Address:	3333 PRESTON RD, SUITE 300 #1095
City:	FRISCO
State/Country:	TEXAS
Postal Code:	75034

PROPERTY NUMBERS Total: 1

Property Type	Number
Patent Number:	10938246

CORRESPONDENCE DATA

Fax Number:

Correspondence will be sent to the e-mail address first; if that is unsuccessful, it will be sent using a fax number, if provided; if that is unsuccessful, it will be sent via US Mail.

Email: stnbsee@gmail.com
Correspondent Name: WAVERLY LICENSING LLC
Address Line 1: 3333 PRESTON RD, SUITE 300 #1095
Address Line 4: FRISCO, TEXAS 75034

NAME OF SUBMITTER:	SON NGUYEN
SIGNATURE:	/Son Nguyen/
DATE SIGNED:	04/22/2022

Total Attachments: 2
source=Exhibit A - Patent Assignment - Array to Waverly - Fully Executed#page1.tif
source=Exhibit A - Patent Assignment - Array to Waverly - Fully Executed#page2.tif

Exhibit A

PATENT ASSIGNMENT

For good and valuable consideration, the receipt of which is hereby acknowledged, Array IP LLC, a limited liability company organized under the State of Texas having its offices at 3333 Preston Rd, Suite 300 – 1038, Frisco, TX 75034 (**"*Assignor*"**), does hereby assign, transfer, and convey unto Waverly Licensing LLC, a limited liability company organized under the laws of the State of Texas having office at 3333 Preston Rd, Suite 300 #1095, Frisco, TX 75034, (**"*Assignee*"**), or its designees, all right, title, and interest that exist today and may exist in the future in and to any and all of the following (collectively, the **"*Patent Rights*"**):

(a) the patent applications and patents listed in the table below (the "***Patents***" or "***Patent***");

Patent / Publication No(s).	Application No(s).	Country	Filing Date
10938246	16/793910	US	02/18/2020

(b) all right, title and interest to the Patent.

(g) all of the rights, privileges including the benefits of any attorney client privilege or attorney work product privilege, title and interest in and to the Patent sold, transferred, assigned and set over to Assignee hereunder including all income, royalties, damages and payments now or hereafter due or payable with respect thereto; and

(h) the right to bring any claim, sue, counterclaim, and recover for the past, present and future infringement of the rights assigned hereunder.

ASSIGNOR: Array IP LLC

By: _____

Name: Tiffany Halfon

Title: Managing Member

Date: 24 March 2022

Exhibit A

ASSIGNEE: Waverly Licensing LLC

By: 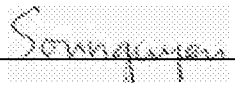

Name: Son Nguyen

Title: Managing Member

Date: 03/24/2022

IN THE UNITED STATES DISTRICT COURT

FOR THE DISTRICT OF DELAWARE

LAMPLIGHT LICENSING, LLC,
Plaintiff,
v.
ABB, Inc.,
Defendant.
C.A. No. 22-418-CFC

LAMPLIGHT LICENSING, LLC,
Plaintiff,
v.
INGRAM MICRO, Inc.,
Defendant.
C.A. No. 22-1017-CFC

NIMITZ TECHNOLOGIES LLC,
Plaintiff,
v.
CNET MEDIA, INC.,
Defendant.
C.A. No. 21-1247-CFC

NIMITZ TECHNOLOGIES LLC,
Plaintiff,
v.
BUZZFEED, INC.,
Defendant.
C.A. No. 21-1362-CFC

NIMITZ TECHNOLOGIES LLC,
Plaintiff,
v.
IMAGINE LEARNING LLC,
Defendant.
C.A. No. 21-1855-CFC

MELLACONIC IP, LLC,
Plaintiff,
v.
TIMECLOCK PLUS, LLC,
Defendant.
C.A. No. 22-244-CFC

MELLACONIC IP, LLC,
Plaintiff,
v.
DEPUTY, INC.,
Defendant.
C.A. No. 22-541-CFC

Friday, November 4, 2022
10:05 a.m.
Evidentiary Hearing

844 King Street
Wilmington, Delaware

BEFORE: THE HONORABLE COLM F. CONNOLLY
United States District Court Judge

APPEARANCES:

CHONG LAW FIRM PA
BY: JIMMY CHONG, ESQ.
Counsel for the Plaintiff Lamplight Licensing, LLC annd Mellaconic IP, LLC

O'KELLY & O'ROURKE, LLC
BY: GEORGE PAZUNIAK, ESQ.
BY: GERARD M. O'ROURKE, ESQ.
Counsel for the Plaintiff Nimitz Technologies

SAND, SEBOLT & WERNOW CO., LPA
BY: HOWARD WERNOW, ESQ.
Counsel for the Plaintiff Mellaconic IP, LLC

FISH & RICHARDSON, P.C.
BY: JEREMY ANDERSON, ESQ.
BY: LANCE WYATT, ESQ.
Counsel for the Defendant CNET, Buzzfeed and Imagine Learning

- - - - - - - - - -

P R O C E E D I N G S

(Proceedings commenced in the courtroom beginning at 10:05 a.m.)

THE COURT: All right. Please be seated.

All right. Good morning. We have a number of cases at issue here today. Let's begin with Lamplight Licensing.

Let's talk about that case, Mr. Chong.

MR. CHONG: Good morning, Your Honor.

THE COURT: Good morning.

Let me just get my papers together.

So the issue that prompted my order convening this hearing in this case had to do with concerns about whether there had been compliance with the third-party litigation disclosure.

And I think it's -- you can have a seat, Mr. Chong. It's going to take a little time to walk through the record because, unfortunately, I think we have to, because I set this hearing date at the request of you on behalf of Sally Pugal.

Is she here today?

MR. CHONG: She is not, Your Honor.

THE COURT: Okay. Now, she's the owner, the

document.

MR. WERNOW: Sure.

BY MR. WERNOW:

Q. What do you remember about this patent purchase agreement, Mr. Bui?

A. There was 50 percent take back towards the previous.

Q. For consideration?

A. For consideration of the net proceeds.

Q. Okay. Can you please go to Exhibit 3.

What's your recollection of Exhibit 3 with respect to the recourse base repayment?

A. With Mavexar?

Q. Correct.

A. So Mavexar basically pays for the litigations of the -- fees for litigations. And then if all goes wrong, they have the right to come after me for the litigation fees.

Q. Okay. And the lawyers, what's your recollection of the attorneys' fees in this case?

A. That it's contingent basis, just depending on how far it goes along.

Q. The attorneys' fees are contingent, correct?

A. Yes.

Q. But the attorneys' expenses, were they part of this agreement with Mavexar?

A. Mavexar is going to pay the fees as a loan on a recourse basis.

Q. You said "fees," but do you mean "expenses"?

A. Expenses.

THE COURT: I mean, I don't know. What's the difference between fees and expenses, sir? Do you know?

THE WITNESS: I feel like -- I mean, I run a restaurant. I feel like fees and expenses are kind of the same, just to me, category, kind of. Something toward like a business or...

BY MR. WERNOW:

Q. And what's your recollection of the complaints that our office, or Mr. Curfman, has sent to you through Mavexar, you review those --

THE COURT: Object to leading. Ask him what he does.

BY MR. WERNOW:

Q. What do you do from Mavexar when someone sends you a complaint?

A. What was that?

Q. What do you do for Mellaconic IP, LLC, when you receive a complaint?

A. I review it and I either confirm it or deny it.

Q. And you can deny it, correct?

A. I can deny it.

MR. WERNOW: Thank you. Nothing further, Your Honor.

THE COURT: All right. Thank you very much.

And, Mr. Bui, you are excused, if you want.

All right. Mr. Anderson, you have been sitting here. Do you have any thoughts?

MR. ANDERSON: No, Your Honor. We have nothing to add to this. Thank you.

THE COURT: Anybody else want to say anything?

MR. WERNOW: Nothing further, Your Honor.

THE COURT: Well, I need to think about what I think are the issues that have been raised by the testimony we've heard today.

I think the testimony has to give pause to anybody who really is concerned about the integrity of our judicial system, the abuse of our courts, and potential abuse, lack of transparency as to who the real parties before the Court are, about who is making decisions in these types of litigation.

But it's a lot to digest, and I may ask for supplemental briefing. I'm actually considering inviting amici to come in to help. And I would be open to receiving recommendations for amici.

Anything else?

All right. If you have any recommendations for

amici, please submit them no later than a week from today. And the cases are going to remain where they are, as I consider these issues.

All right. We are adjourned.

(The proceedings concluded at 1:07 p.m.)

IN THE UNITED STATES DISTRICT COURT

FOR THE DISTRICT OF DELAWARE

BACKERTOP LICENSING LLC, Plaintiff, v. AUGUST HOME, INC., Defendant.	)	C.A. No. 1:22-cv-00573-CFC
BACKERTOP LICENSING LLC, Plaintiff, v. CANARY CONNECT, INC., Defendant.	)	C.A. No. 1:22-cv-0572-CFC

Thursday, November 10, 2022
10:00 a.m.
Evidentiary Hearing

844 King Street
Wilmington, Delaware

BEFORE: THE HONORABLE COLM F. CONNOLLY
United States District Court Judge

APPEARANCES:

CHONG LAW FIRM PA
BY: JIMMY CHONG, ESQ.

-and-

FRESH IP, PLC
BY: RONALD BURNS, ESQ.

Counsel for the Plaintiff

CONNOLLY GALLAGHER
BY: ALAN R. SILVERSTEIN, ESQ.
Counsel for the Defendant

- - - - - - - - - - -

Q. All right.

Can you tell me all of the sources of funding that Backertop has for anything?

A. My understanding is, it's through Mavexar, is the funding.

THE COURT: All right. Thank you very much. You may step down. Appreciate it.

THE WITNESS: Thank you, Your Honor.

THE COURT: Thank you.

THE WITNESS: Did you want me to take these or do you want a copy?

THE COURT: We'll take them.

THE WITNESS: Okay. Thank you, Your Honor.

THE COURT: Thank you.

Mr. Burns, do you wish to say anything?

MR. BURNS: I'm sorry, Your Honor?

THE COURT: Do you wish to say anything?

MR. BURNS: I don't have anything at this time, Your Honor, not unless the Court has questions.

THE COURT: Who's the real owner? Who's the real party in interest of the asserted patents in this case?

MR. BURNS: Backertop.

THE COURT: And we've just heard testimony that 95 percent of the proceeds go to Mavexar.

MR. BURNS: I'm not clear on that part, because I'm not clear on the agreement between Backertop and Mavexar themselves. I know that, in acquiring the patents, Backertop took on the obligation of Terrace to the previous owner, the Daedalus Blue, I think, is who you referred to, which was the 45 percent. And so --

THE COURT: 49 percent, I think.

MR. BURNS: I'm sorry, 49 percent. Excuse me. And then Backertop, obviously, gets its 5 percent. And then Mavexar has its portion. We, of course, have our portion.

THE COURT: So what are the portions? What does Mavexar get, under your understanding?

MR. BURNS: I'm -- I'm not sure. I'm not sure of the arrangement between Backertop and Mr. Chong. I'm only sure of what the arrangement is between my firm and Backertop.

THE COURT: What does your firm get?

MR. BURNS: Depending on the stage of the litigation. So in these two cases, we got nothing. They're dismissed. We filed a motion to dismiss them, or notice of dismissal. In a case where there's recovery, we get 22.5 percent.

THE COURT: And what bar are you a member of?

MR. BURNS: Text State Bar, Your Honor.

THE COURT: How do you -- can you speak to the professional rules of conduct and the circumstance where a client is retained by a lawyer, but has no communication whatsoever with the lawyer? How does that work?

How is the lawyer -- for instance, how can the lawyer run conflicts and be assured that it doesn't have a conflict?

How can the lawyer apprise the client of the lawyer's obligations and the fiduciary responsibilities he owes to the client?

I mean, all those questions. Have you looked into that?

MR. BURNS: I'm familiar with what you're referring to, yes, Your Honor.

THE COURT: So tell me, what rules are implicated, and how is a lawyer able to do that under the Rules of Professional Conduct?

MR. BURNS: Well, in this particular case, I was approached by Mavexar. I have previously worked with Papuol Chaudhari over a decade ago, when he was in another -- he was in a law firm. We had done some patent litigation previously together.

He reached out to me, indicated that he represented and was essentially a consultant/agent for some companies, would I like to examine and review some of

these portfolios and see if I can participate. I said yes.

He sent me the agreement they had with Backertop. I reviewed that. It seemed like agent status or consultant status with Mavexar. I got the information on Backertop and also got the information on the prospects that they were looking at, and ran conflicts, checked that way. And came back with --

THE COURT: What did you say about the conflicts? What, you got --

MR. BURNS: I said I ran conflicts both with Backertop and Ms. LaPray, and then also prospective defendants in each of these cases, to make sure that, you know, our firm had no conflicts. And then agreed to representation.

Sent over a draft agreement. My understanding is it was reviewed, agreed to. We signed it. And then I began preparing the complaints.

THE COURT: Do you have a copy of your retention agreement with Backertop?

MR. BURNS: I do not, Your Honor, no.

THE COURT: I would like a copy of it.

MR. BURNS: I would happily provide that to the Court.

THE COURT: And, actually, we'll be issuing,

shortly, an order requesting production of a number of documents. We're about to do it in some of the other cases where these issues have arisen.

MR. BURNS: Yes, Your Honor.

THE COURT: You agree that the Court has an obligation for the real parties in interest to be before it to assure that?

MR. BURNS: I do agree, yes, sir.

THE COURT: I mean, there's a rule of Federal Civil Procedure that addresses that, right?

MR. BURNS: That is correct, Your Honor.

THE COURT: Yeah. And are you -- you're of the mind that Mavexar is not a real party in interest here; is that your position?

MR. BURNS: That's -- yes, Your Honor, that would be my position. My understanding is that -- and according to documentation I reviewed, Backertop owns the patents. The compensation is a contingent compensation to the previous owner.

Mavexar, as a consultant and advisor to Backertop, gets a portion. It runs a lot of the administrative processes for Backertop, and then we run the cases. And that's my understanding.

THE COURT: And by structuring this litigation the way you have with Mavexar, you've basically put a

plaintiff in this court asserting a patent, and the plaintiff has no assets. So you've immunized, effectively, the plaintiff from the consequences of a frivolous lawsuit, for instance.

Mavexar, who's driving the train, isn't formally a party here, so you've insulated it, assuming nobody wanted to look into this.

Fair?

MR. BURNS: I wouldn't completely agree with that, Your Honor. The client here, Backertop has formed as an LLC, which does provide a level of insulation for Ms. LaPray personally.

I did not inquire as to Backertop's finances or banking accounts or anything of that nature before the proceedings began, so I had no knowledge of that prior.

But it's a good faith -- in our estimation, it was a good faith claim, good faith basis for filing the suits. We had a plaintiff that owned patents. We had defendants that we had good faith claim of infringement. So we considered it fair basis for filing.

THE COURT: Anything else you want to say?

MR. BURNS: No, Your Honor.

THE COURT: Okay. Thank you.

Mr. Chong?

MR. CHONG: No, Your Honor.

THE COURT: All right. I need to look further into this and think about it more. You're invited, if you want, either of you, to submit any briefing.

I've already raised in, I'll call them parallel hearings, concerns I have. I've articulated some further concerns because I think some of the testimony here has only added to the concerns.

And I guess we're adjourned.

(The proceedings concluded at 11:21 a.m.)

IN THE UNITED STATES DISTRICT COURT
FOR THE DISTRICT OF DELAWARE

WAVERLY LICENSING LLC, Plaintiff, v. **GRANITE RIVER LABS INC.,** Defendant.	Civil Action No.: 1:22-cv-00422-CFC **TRIAL BY JURY DEMANDED**

AMENDED CORPORATE DISCLOSURE STATEMENT

Pursuant to Rule 7.1 of the Federal Rules of Civil Procedure, and this Court's April 18, 2022 Standing Order Regarding Disclosure Statements, Plaintiff Waverly Licensing LLC hereby submits its Amended Corporate Disclosure Statement. Plaintiff states that it is a Texas limited liability company, its sole owner and managing partner is Son Nguyen, it does not have a parent corporation, and no publicly held corporation owns ten percent (10%) or more of its stock.

Dated: September 2, 2022

Respectfully submitted,

CHONG LAW FIRM PA

/s/ Jimmy Chong

Jimmy Chong (#4839)
2961 Centerville Road, Suite 350
Wilmington, DE 19808
Telephone: (302) 999-9480
Facsimile: (302) 800-1999
Email: patent@chonglawfirm.com

ATTORNEYS FOR PLAINTIFF

CERTIFICATE OF SERVICE

I hereby certify that I electronically filed the foregoing with the Clerk of the Court for the United States Court of Appeals for the Federal Circuit by using the appellate CM/ECF system on November 30, 2022.

A copy of the foregoing was served upon the following counsel of record by electronic mail and upon the district court by overnight delivery:

Via Email to counsel for Defendants:

Karen Jacobs, Morris, Nichols, Arsht & Tunnell LLP, 1201 North Market Street, PO Box 1347, Wilmington, DE 19899, kjacobs@morrisnichols.com;

Steven J. Balick and Andrew C. Mayo, Ashby & Geddes, 500 Delaware Avenue, 8th Floor, PO Box 1150, Wilmington, DE 19899, sbalick@ashbygeddes.com, amayo@ashbygeddes.com

Adam R. Hess and Alex E. Wolcott, Squire Patton Boggs (US) LLP, 2550 M. Street, NW, Washington, DC 20037, adam.hess@squirepb.com, alex.wolcott@squirepb.com

Via Overnight Delivery to the Court:

The Honorable Colm F. Connolly
J. Caleb Boggs Federal Building
844 N. King Street
Unit 31
Room 4124
Wilmington, DE 19801-3555

November 30, 2022 */s/ David R. Bennett*

DAVID R. BENNETT
Direction IP Law
P.O. Box 14184
Chicago, IL 60614
D: (312) 291-1667
dbennett@directionip.com